CITY OF ALBANY

DEPARTMENT OF PUBLIC WORKS

DIVISION E

STORMWATER MANAGEMENT

ENGINEERING STANDARDS

Prepared By

PUBLIC WORKS DEPARTMENT

ALBANY, OREGON 97321

Telephone: (541) 917-7676

January 2015

TABLE OF CONTENTS

E 1.00 – GENERAL **1**

E 1.01 PURPOSE 1
E 1.02 SHORTENED DESIGNATION 1
E 1.03 APPLICABILITY 2
E 1.04 REFERENCES 2
E 1.05 *STANDARD CONSTRUCTION SPECIFICATIONS* 2
E 1.06 DEFINITIONS AND TERMS 2

E 2.00 –STORMWATER PLAN **4**

E 2.01 STORMWATER REPORT AND SITE PLANS 4
E 2.02 EXISTING STORMWATER SITE PLAN 4
E 2.03 PROPOSED STORMWATER SITE PLAN 4

E 3.00 – STORMWATER QUALITY MANAGEMENT DESIGN AND CACULATIONS **5**

E 3.01 GENERAL REQUIREMENTS 5
E 3.02 FACILITY SELECTION AND LOCATION 5
E 3.03 STORMWATER QUALITY FACILITY SIZING 8
E 3.04 FACILITY DESIGN CRITERIA 10
E 3.05 LANDSCAPE REQUIREMENTS 19
E 3.06 OPERATION & MAINTENANCE 22

E 4.00 – STORMWATER QUANTITY MANAGEMENT DESIGN & CALCULATIONS **22**

E 4.01 GENERAL REQUIREMENTS 22
E 4.02 RUNOFF CALCULATIONS AND SYSTEM CAPACITY 23
E 4.03 SUPPORTING DATA 25

E 5.00 – PIPES AND CLOSED CONDUIT **26**

E 5.01 GENERAL 26
E 5.02 PIPE SIZE 26
E 5.03 GRADE 26
E 5.04 ALIGNMENT 26
E 5.05 COVER REQUIREMENTS 27

E 6.00 – INLETS, OUTLETS, CONNECTIONS **27**

E 6.01 CURB INLETS 27
E 6.02 SURFACE DRAINAGE INTERCEPTION 28
E 6.03 SLOPE INTERCEPT INLETS 28
E 6.04 SUBSURFACE DRAINAGE INTERCEPTION 28
E 6.05 OUTLETS INTO SURFACE DRAINAGE CHANNELS 28
E 6.06 MANHOLES 29

E 7.00 – SURFACE DRAINAGE **29**

E 7.01 SURFACE DRAINAGE 29
E 7.02 CONSTRUCTED WATERCOURSE REQUIREMENTS 30
E 7.03 NATURAL CREEK REQUIREMENTS 30

E 8.00 – STORMWATER DETENTION **31**

E 8.01 GENERAL REQUIREMENTS 31
E 8.02 SURFACE PONDS 32
E 8.03 CLOSED DETENTION SYSTEM 33
E 8.04 DETENTION POND EASEMENTS 34

E 9.00 – EROSION PREVENTION AND SEDIMENT CONTROL 34

E 9.01 EROSION PREVENTION AND SEDIMENT CONTROL 34

E 10.00 – APPENDIX

E 10.01 24-HOUR RAINFALL FOR ALBANY
E 10.02-A SHALLOW CONCENTRATED FLOW VELOCITY
E 10.02-B RAINFALL INTENSITY-DURATION FREQUENCY CURVES
E 10.03 PLANTING MATRIX AND PLANTING DIAGRAM EXAMPLES
E 10.04 OPERATIONS AND MAINTENANCE AGREEMENT & CHECKLISTS
E 10.05 DESIGN GUIDE DRAWINGS

DIVISION E - STORMWATER MANAGEMENT

E 1.00 – GENERAL

E 1.01 PURPOSE

The purpose of these Stormwater Management Engineering Standards is to provide a consistent policy under which certain physical aspects of stormwater management will be implemented. Most of the elements contained in this document are Public Works oriented and most are related to the development or platting process; however, it is intended that they apply to both public and private work designated herein.

These Engineering Standards cannot provide for all situations. They are intended to assist, but not to serve as a substitute for competent work by design professionals. Engineers are expected to bring the best skills from their respective disciplines to each project. If the Engineer anticipates challenges in meeting these standards, they should contact the City prior to extensive design efforts.

These Engineering Standards are not intended to limit unreasonably any innovative or creative effort that could result in better quality, better cost savings, or both. Any proposed departure from the Engineering Standards will be judged on the likelihood that such variance will produce a compensating or comparable result, in every way adequate for the user and City over the life cycle of the improvement.

Note that the presentation, layout, and general configuration of all engineering design drawings shall be in conformance with Albany's drafting design criteria as outlined in Division A of the Engineering Standards. Engineers shall prepare project design drawings in conformance with the requirements contained therein.

The standards have the objective of developing a stormwater management system that will:

A. Be of adequate design to safely manage stormwater generated upstream and on the site from given storm intervals to an approved point of disposal.

B. Provide points of connection for stormwater generated by future development upstream.

C. Prevent the uncontrolled or irresponsible discharge of stormwater onto adjoining public or private property.

D. Prevent the capacity of downstream channels and storm drainage facilities from being exceeded.

E. Have sufficient structural strength to resist erosion and all external loads that may be imposed.

F. Maintain the runoff characteristics of the original undeveloped drainage basin, where feasible, as determined by the City Engineer.

G. Protect Albany's natural drainage system of streams, lakes, and wetlands.

H. Maintain or improve overall stormwater quality.

I. Be designed in a manner to allow economical future maintenance.

J. Be designed using materials to insure a minimum practical design life of 75 years.

K. Be consistent with the *Albany Municipal Code* (AMC), *Albany Development Code*, Albany *Standard Construction Specifications* and all applicable state and federal regulations and requirements for stormwater quantity and quality.

E 1.02 SHORTENED DESIGNATION

These City of Albany *Stormwater Management Engineering Standards* shall be cited routinely in the text as the "Engineering Standards."

E 1.03 APPLICABILITY

These Engineering Standards shall govern construction and upgrading of all public stormwater management facilities in the City of Albany and applicable work within its service areas. These Engineering Standards shall also govern the construction of private stormwater management facilities that require Public Works review.

Permanent stormwater management facilities shall be provided on all property improvements within the City of Albany per these Engineering Standards for the following types of development:

A. All major partitions and subdivisions.

B. All public and private development that requires stormwater reviews and/or approvals from the Public Works Department. These Engineering Standards are intended to fulfill the requirements of the "Special Storm Sewers" section of the Uniform Plumbing Code for private storm drains.

C. Developments entailing construction that would change the point of discharge of surface waters, the quantity of discharge, or discharge surface waters at a higher velocity or flow than that of the preconstruction discharge rate, or could contribute to pollution of surface waters.

D. Construction or reconstruction of public roadways and temporary detours.

E. Developments entailing construction in or adjacent to any existing stream or surface watercourse including intermittent streams.

F. Developments requiring construction in or adjacent to the 100-year floodplain of any stream.

E 1.04 REFERENCES

The Engineering Standards are intended to be consistent with the most currently adopted provisions of all stormwater-related guidelines including but not limited to:

A. *Albany Area Stormwater Management Plans*

B. *Oregon Statewide Planning Goals and Guidelines*

C. *Albany Transportation System Plan* (TSP)

D. *Albany Municipal Code* (AMC)

E. *Albany Comprehensive Plan*

F. *Albany Development Code* (ADC)

G. *Albany Facility Plans*

E 1.05 *STANDARD CONSTRUCTION SPECIFICATIONS*

Except where the standards provide otherwise, design detail, workmanship, and materials shall be in accordance with the current edition of the *Standard Construction Specifications* prepared by the City of Albany.

E 1.06 DEFINITIONS AND TERMS

A. City Engineer. The City Engineer of the City of Albany or his/her authorized representative.

B. Creek. Any and all surface water routes generally consisting of a channel having a bed, banks, and/or sides in which surface waters flow in draining from higher to lower land, both perennial and intermittent; the channel, banks, and intervening artificial components, excluding flows that do not persist for more than 24 hours after cessation of one-half (1/2) inch of rainfall in a 24-hour period from October through March.

C. Definition of Words. Wherever in these standards the words directed, required, permitted, ordered, designated, or words of like importance are used, they shall be understood to mean the direction, requirement, permission, or order of designation of the City Engineer. Similarly, the words approved, acceptable, and satisfactory shall mean approved by, acceptable to, or satisfactory to the City Engineer.

D. Detention. The holding of runoff for a short period of time and then releasing it to the natural water course where it returns to the hydrologic cycle.

E. Drainage Facilities. Pipes, ditches, detention basins, creeks, culvert bridges, etc., used singularly or in combination with each other for the purpose of conveying or storing runoff.

F. Stormwater Master Plan. A document adopted by Albany's City Council that describes Albany's existing and planned Trunk Drainage System. The planned drainage system is based on runoff projected for Albany based on Albany's full development under the adopted Comprehensive Plan.

G. Easement. Easements are rights of use over property of another. New stormwater easements granting rights to the City shall be prepared on City forms.

H. F.I.R.M. Flood Insurance Rate Maps, which have been developed by the Federal Emergency Management Agency, showing 100-year, base flood elevations for various creeks and rivers.

I. Flow-Through Facility. A Post-Construction Stormwater Quality Facility that is designed to remove pollutants from stormwater by filtering through vegetation and soil media, with subsequent discharge to an approved drainage facility. A Flow-Through Facility may or may not allow incidental infiltration into underlying native soils, but design and sizing is based on treating and conveying all design flows to a piped or other approved drainage facility.

J. Impervious Areas / Impervious Surfaces. Those hard surface areas located upon real property that either prevent or retard saturation of water into the land surface, as existed under natural conditions pre-existent to development, and cause water to run off the land surface in greater quantities or at an increased rate of flow from that present under natural conditions pre-existent to development. Common impervious surfaces include, but are not limited to rooftops, concrete or asphalt sidewalks, walkways, patio areas, driveways, parking lots or storage areas and graveled, oiled, macadam or other surfaces that similarly impact the natural saturation or runoff patterns that existed prior to development.

K. Natural Location. The location of those channels, swales, and other non-manmade conveyance systems as defined by the first documented topographic contours existing for the subject property either from maps or photographs.

L. Natural Resource Overlay District. An overlay district as defined in the Albany Development Code.

M. Peak Discharge. The maximum water runoff rate (cfs) determined for the design storm.

N. Plans. Construction plans, including system site plans, storm drain plans and profiles, cross sections, detailed drawings, etc., or reproductions thereof, approved or to be approved by the City Engineer, which show the location, character, dimensions, and details for the work to be done, in which constitute a supplement to these Engineering Standards.

O. Post-Construction Stormwater Quality Facility. Permanent stormwater infrastructure incorporated into a development or redevelopment project designed to reduce pollutant loads and runoff velocity from impervious surfaces, and which may also include improvements constructed to reduce the quantity of stormwater runoff leaving the site. May also be referred to as a "Stormwater Quality Facility" in this document.

P. Private Storm Drain. A storm drain facility located on private property and/or one that is not considered a public storm drain facility.

Q. Public Storm Drain. Any storm drain facility in the public right-of-way or easement operated and maintained by the City.

R. Receiving Bodies of Water. Creeks, streams, lakes, and other bodies of water into which waters are artificially or naturally directed.

S. Release Rate. The controlled rate of release of drainage, storm, and runoff water from property, storage pond, runoff detention pond, or other facility during and following a storm event.

T. Right-of-Way. All land or interest therein which by deed, conveyance, agreement, easement, dedication, usage, or process of law is reserved for or dedicated to the use of the general public within which the City has the right to install and maintain storm drains.

U. Sedimentation. Disposition of erosional debris-soil sediment displaced by erosion and transported by water from a high elevation to an area of lower gradient where sediments are deposited as a result of slack water.

V. Stormwater Management Facilities. Include drainage facilities and post-construction stormwater quality facilities as defined above.

E 2.00 –STORMWATER PLAN

E 2.01 STORMWATER REPORT AND SITE PLANS

Stormwater site plans, drawn to scale, showing the existing and proposed stormwater systems and other required information shall be submitted with the stormwater report for a development. The existing and proposed stormwater site plan shall be on separate plan sheets. The proposed plan shall show profile and plan view of the proposed improvements. The stormwater report shall include post-construction stormwater quality facility sizing forms and calculations, and sizing calculations for stormwater conveyance and detention facilities.

E 2.02 EXISTING STORMWATER SITE PLAN

A topographical contour map, drawn to scale, and clearly defining existing conditions:

A. The plan shall clearly show the drainage basins within, and/or contributing to, the improvement limits. Existing routing and discharge locations of the basins shall be shown.

B. Existing contours of the land at 2-foot intervals, or as otherwise required or approved by the City Engineer, with the location of existing buildings, structures, and public and private utilities on the property. Location of any existing building or structure on adjacent property that is within 15 feet of a proposed stormwater facility.

C. All areas improved or unimproved, lying upstream and draining to or through the proposed development.

D. All areas improved or unimproved, lying downstream, to a trunk line, that will receive the runoff developed from the site.

E. Location of existing stormwater facilities that transport surface water onto, across, or from the site, including natural watercourses, artificial channels, drain pipes, or culverts.

F. Location of any existing post-construction stormwater quality facilities.

G. Location of any septic drain fields and areas of known contaminated soil or groundwater.

H. Locations of springs, wells, or other subsurface water sources.

I. Arrows indicating drainage direction in all public and private property and for all stormwater conveyance systems.

J. The route used in determining the pre-developed time of concentration.

K. Existing structures and impervious surfaces.

L. Floodplains, Natural Resource Overlay Districts, and wetlands.

E 2.03 PROPOSED STORMWATER SITE PLAN

The proposed stormwater plan sheets shall clearly define the proposed improvements and include necessary construction details. (The requirements of this section, as applicable, satisfy the requirements for a post-construction stormwater quality plan as identified in Title 12 of the Albany Municipal Code.)

A. The plan shall clearly show the drainage basins within, and/or contributing to, the improvement limits. Proposed routing of all piping and other drainage improvements and discharge locations of the basins shall be shown.

B. Proposed contours of the land after completion of the project at two (2)-foot intervals, or as otherwise required or approved by the City Engineer. This shall include elevations, dimensions and location, extent, and slopes of all grading work proposed to be done.

C. Identify cut and fill areas, soil types, topography, and vegetation.

D. Location of proposed stormwater facilities that transport surface water across or from the site, including, but not limited to, natural watercourses, artificial channels, under drain pipes, and culverts.

E. Location, type, size, capacity, and details of proposed post-construction stormwater quality facilities, detention facilities, impervious area reduction measures, and excess flow escape routing. Clearly identify all impervious surfaces contributing to each facility.

F. Location of trees to be protected for impervious surface credits.

G. Planting plans for vegetated post-construction stormwater quality facilities.

H. Boundaries and total square footage of all impervious surfaces and areas that will be otherwise altered in a manner that will increase surface water runoff and boundaries of all areas to remain in an existing or natural condition.

I. The route used in determining the post-developed time of concentration.

E 3.00 – STORMWATER QUALITY MANAGEMENT DESIGN AND CACULATIONS

E 3.01 GENERAL REQUIREMENTS

Post-construction stormwater quality facilities are encouraged on all development and redevelopment projects and are required in most situations per Title12 of the Albany Municipal Code. Public post-construction stormwater quality facilities located in the public right-of-way, that treat both water from the public right-of-way and adjacent private development, are encouraged when feasible. In most instances, facilities not located in the public right-of-way will be required to be privately maintained consistent with the requirements of Title 12 of the Albany Municipal Code and the Private Stormwater Facilities Operations and Maintenance Agreement and checklists provided in Appendix E 10.04 Operations & Maintenance Agreement and Checklists.

A. These requirements are established to comply with state and federal water quality and stormwater regulations, and the Albany Municipal Code. The purpose of the stormwater quality facilities standards are to:
   - reduce pollutant loads,
   - reduce the velocity and quantity of stormwater runoff, and
   - provide for the capture and treatment of stormwater runoff on or as close as possible to the site where it is generated.

B. Additionally, the goal of these standards is to encourage design and construction of stormwater quality facilities that are visually attractive and integrated into site designs and landscaping. Generally, vegetated stormwater quality facilities may be located in required site landscaping (such as parking lot islands, open space, and street-side planter strips). Locating post-construction stormwater quality facilities in required on-site landscaped areas is allowed when approved in the Albany Development Code.

E 3.02 FACILITY SELECTION AND LOCATION

A. Most residential subdivisions, partitions, and small site developments should be able to locate post-construction stormwater quality facilities in the public right-of-way. When projects, such as

larger site developments, have more impervious area proposed than can be treated within the area required for frontage improvements, private facilities shall be incorporated into the site design. Private facilities will require that a Private Stormwater Facilities Operations and Maintenance Agreement (See Appendix E 10.04 Operations & Maintenance Agreement and Checklists) be recorded with the property. Where site constraints prevent inclusion of post-construction stormwater quality facilities as required, the developer will be required to pay a fee in-lieu of constructing the facilities, consistent with Title 12 of the Albany Municipal Code. Collected fees will be dedicated to funding stormwater quality infill projects.

The City recognizes that there will be instances where stormwater quality ponds may be more appropriate than locating facilities in the right-of-way. The City Engineer will consider public water quality ponds on a case-by-case basis. Private pond systems that would be maintained by a Home Owners Association (HOA) or individual home owners are not allowed.

B. There are two categories of stormwater quality facilities that may be designed to meet post-construction stormwater quality requirements, although restrictions apply for various site types and conditions:

- Vegetated Stormwater Quality Facilities that provide filtration of stormwater through soil and plant material. These facilities are encouraged for use on all projects on private property and in public rights-of-way. They may be sized using a simplified sizing factor method, and may be located as approved within site landscaping, street landscape strips, designated open space, floodplains, and adjacent to or in some cases encroaching within Significant Natural Resource overlays.
- Manufactured Facilities, such as underground vault type treatment systems may be approved on a case-by-case basis when vegetated stormwater facilities are not a feasible option due to site constraints. These facilities are not allowed as publicly owned, operated, or maintained facilities.

C. Stormwater quality facilities are sized based on the amount of impervious surface in the contributing drainage area. Impervious area reduction measures may be used, as specified in these standards, to reduce the required size of the stormwater quality facilities.

D. Tables 3.02-A and 3.02-B list approved impervious area reduction measures and stormwater quality facilities and their applicability for various land use and site conditions to assist in selection of the most appropriate measures and facilities for a project site.

TABLE 3.02-A: Stormwater Quality Facility Selection by Land Use

FACILITY TYPE	PUBLIC ROW	RESIDENTIAL SUBDIVISION	COMMERCIAL INDUSTRIAL MULTI-FAMILY (ONSITE)	INSTITUTIONAL (ONSITE)	PRIVATE STREET
Impervious Reduction Measures					
Pervious Pavement			✓	✓	
Green Roof			✓	✓	
Tree Protection	✓	✓	✓	✓	✓
Vegetated Stormwater Quality Facilities (Filtration)					
Street-side Planter	✓	✓			✓
Street-side Shallow Swale	✓	✓			✓
Curb Extension Planter/Pod	✓	✓			✓
Onsite Planter			✓	✓	
Onsite Swale			✓	✓	
Manufactured Stormwater Quality Facilities					
Manufactured Facility			✓	✓	✓

TABLE 3.02-B: Stormwater Quality Facility Selection by Site Conditions

FACILITY TYPE	ON OR NEXT TO BUILDING	NATURAL RESOURCE OVERLAY DISTRICT	PARKING LOT	LANDSCAPED AREA	FLOODPLAIN	STEEP SLOPE (>12%) or LANDSLIDE AREA	ON FILL (5FT DEEP)	CONTAMINATED SOILS
Impervious Reduction Measures								
Pervious Pavement			✓		✓		✓**	
Green Roof	✓*				✓	✓	✓	✓
Tree Protection			✓	✓	✓	✓		✓
Vegetated Stormwater Quality Facilities (Filtration)								
Street-side Planter				✓	✓	✓*	✓*	✓*
Street-side Shallow Swale				✓	✓	✓*	✓*	✓*
Curb Extension Planter/Pod				✓	✓	✓*	✓*	✓*
Onsite Planter	✓*		✓	✓	✓	✓*	✓*	✓*
Onsite Swale	✓*	✓	✓	✓	✓	✓*	✓*	✓*
Manufactured Stormwater Quality Facilities								
Manufactured Facility			✓			✓	✓	✓

**Impermeable liner required. May have additional building code requirements for facilities on or adjacent to buildings. Even with liners, the presence of certain contaminants may prohibit installation of post-construction stormwater quality facilities.*
***Geotechnical report required*

E 3.03 STORMWATER QUALITY FACILITY SIZING

A. The City's stormwater quality design criteria are as follows:

- Capture and treatment of 80% of the average annual runoff volume (corresponds to a one (1)-inch in 24 hours rain event).
- Treatment system design goal of removing 70% of the total suspended solids from the captured volume. Removal of suspended solids is a design surrogate for water quality treatment for various pollutants including the City's regulatory requirements to address mercury and bacteria Total Maximum Daily Loads for the Willamette Basin, per the Oregon Department of Environmental Quality.
- Vegetated stormwater quality facilities listed in this chapter and designed according to City standards have been established to meet the stormwater quality design criteria.

B. Stormwater Quality Facility Sizing by Facility Type:

1. Vegetated Facilities (Filtration). The facility sizing method for filtration-based vegetated stormwater quality facilities uses a simple surface area ratio calculation. The impervious area requiring treatment is multiplied by the applicable sizing factor (See Table 3.03) to produce the minimum required surface treatment area of the facility. The facilities that may be designed using this simplified sizing method are: street-side planters, street-side shallow swales, curb extension planters, onsite planters, and onsite swales. The sizing factor analyses were based on the Santa Barbara Urban Hydrograph (SBUH) method.

   The development site should be divided into subcatchment drainage areas, and the required facility sizing determined separately for each area. For onsite planters and onsite swales, the impervious surface area within individual sub-catchment areas shall be less than 20,000 square feet, unless otherwise approved by the City Engineer. Multiple facilities and facility types may be used to meet the treatment requirements. The treatment area calculated using the sizing factors is the surface area required at the maximum stormwater quality treatment ponding depth (listed in the Facility Design Criteria section) for the flow-through facility dimensions identified in these standards. Variations in facility dimensions and ponding depths will require more detailed evaluations to determine appropriate sizing factors for the respective design. Any proposed non-flow-through facility would also require detailed evaluation of appropriate sizing factors. Table 3.03 provides stormwater quality facility sizing factors by facility type.

TABLE 3.03-A: Stormwater Quality Facility Sizing Factors

FACILITY TYPE	SIZING FACTOR	NOTES
Street-side Planter	0.018	Size = surface area of vegetated facility with vertical walls. Design treatment ponding depth = 8 inches above soil surface.
Street-side Shallow Swale	0.025	Size = surface area of facility at design treatment ponding depth of 5 inches, not total surface area of facility.
Curb Extension Planter/ Pod	0.018	Size = surface area of vegetated facility with vertical walls. Design treatment ponding depth = 8 inches above soil surface.
Onsite Planter	0.018	Size = surface area of vegetated facility with vertical walls. Design treatment ponding depth = 8 inches above soil surface.
Onsite Swale	0.025	Size = surface area of facility at design treatment ponding depth of 8 inches, not total surface area of facility.

2. Manufactured Treatment Technologies. The use of, and type of, manufactured treatment devices must be approved by the City Engineer. The treatment device shall be sized according to the manufacturer's recommendations and designed to meet the City's stormwater quality design criteria.

C. Determination of Impervious Area Requiring Treatment. Sizing of stormwater quality facilities is based on the amount of impervious area draining to the facility. The impervious area requiring treatment is calculated by subtracting impervious area reduction credits from the gross impervious area.

1. Calculating Gross Impervious Area.

a. For single-family residential development, the gross impervious area shall be determined by multiplying the number of single-family residential lots (all phases and parcels) by 2,700 square feet and adding it to the measured actual impervious area of streets and sidewalks from engineering site plans.

b. For all other development, gross impervious area shall be calculated by measuring actual impervious area from engineering site plans. The gross impervious area is the total of: new impervious area, plus replaced and/or re-surfaced impervious area, plus any additional pre-existing impervious area that will drain across the new or replaced/re-surfaced impervious area.

2. Impervious Area Reduction Credits. Reduction credits may be given for pervious pavements, green roofs, and tree protection.

a. Pervious pavements include pervious asphalt, pervious concrete, permeable pavers, and grid systems. Pervious pavement is not considered a stormwater quality facility to provide treatment for runoff from other impervious surfaces. However, pervious pavement area may be considered to be 100% pervious in stormwater quality facility-sizing calculations. Pervious pavement may be allowed and considered for impervious reduction credit on private property in the following locations: parking lots, walkways, patios/courtyards, and other locations as approved. When considering pervious pavement options, it is important to remember Americans with Disabilities Act (ADA) requirements and how they may impact different design options. Pervious pavement shall only be considered for impervious area reduction credit when it is designed without any impermeable liner.

b. A green roof is a lightweight vegetated roof system with waterproofing material, drainage, growing medium, and specially-selected plants. Green roofs may be considered to be 100% pervious in stormwater quality facility sizing calculations.

c. Tree protection credit. Impervious area reduction credits are available for protection of existing trees in certain locations that are adjacent to impervious surfaces. To receive stormwater quality credit, retained trees shall be a minimum 8 inches in diameter as measured at 4.5 feet above mean ground level from the base of the trunk. This credit is for the stormwater management benefits that trees of this size provide, including interception and evaporation of rainfall, reduction and slowing of runoff, and cooling of surfaces that contribute to thermal loading of runoff.

i. Tree credits are not available for required street trees or trees in a Significant Natural Resource Overlay District area.

ii. The total tree credit shall not exceed 25% of the total gross impervious area.

iii. To receive a credit, the existing tree and tree canopy must be on the development site and within 20 feet of new and/or replaced ground level

impervious or other hard surfaces (e.g., driveway or patio) on the development site. Distance from impervious or other hard surfaces is measured from the center of the tree trunk.

iv. The retained tree canopy area shall be measured as the area within the tree drip line. A drip line is the line encircling the base of a tree, which is delineated by a vertical line extending from the outer limit of a tree's branch tips down to the ground.

v. Overlapping canopy area of trees are not cumulative and may only be counted once.

vi. An arborist report may be required if impervious surface is proposed within the drip line of the existing tree. The arborist report must identify that the tree is likely to survive following construction in order to receive the credit.

vii. Impervious area reduction credits are given as a percentage of the existing tree canopy area, or a minimum credit of 100 square feet for evergreen trees, and 50 square feet for deciduous trees, whichever is greater.

- Evergreen trees: 20% of canopy area
- Deciduous trees: 10% of canopy area

viii. The existing tree roots, trunk, and canopy shall be fenced and protected during construction activities for all phases of development. Trees shall be maintained and protected on the site after construction and for the life of the development, or until any approved redevelopment occurs in the future. During the life of the development, trees approved for stormwater credit shall not be removed without approval from the City. (In addition to approvals from a stormwater credit perspective, additional approvals for tree felling may be required consistent with the Albany Municipal Code and Albany Development Code.) Trees that are removed or die shall be replaced within six (6) months with like species. Trees may be pruned for safety purposes only; however, if a tree is located near a building, pruning to protect the structure is allowed.

E 3.04 FACILITY DESIGN CRITERIA

This section provides design criteria for the City's approved post-construction stormwater quality facilities. The approved facilities were developed with the intent of providing flexibility to the design engineer to select the most appropriate facility for each unique situation. However, it should be noted that the City reserves the right to require design modifications for public facilities in order to minimize long-term operation and maintenance costs and to accommodate other public needs such as preservation of on-street parking.

A. Post-Construction Stormwater Quality Criteria by Facility Type. Post-construction stormwater quality facilities shall be designed as flow-through facilities. The use of non-flow-through facilities would require approval of the City Engineer and would be subject to additional requirements and, most likely, larger sizing factors. Each facility shall be sized appropriately to treat the contributing drainage area. The City's *Standard Construction Specifications* identify construction requirements and provide standard drawings for each facility type.

Impervious Area Reduction Measures

1. Pervious Pavement. These systems provide paving solutions that do not contribute to a site's total impervious area. Pervious pavement solutions include pervious asphalt and concrete, permeable paver systems including various modular pre-cast units, and concrete or plastic grid systems that are filled with soil/vegetation or permeable aggregate. Pervious paving is an impervious reduction measure only, and not a stormwater quality

facility designed to receive runoff from adjacent areas. Design site grading to slope adjacent impervious and pervious areas away from pervious pavement to the maximum extent practicable.

Pervious pavements shall be designed to provide a minimum initial infiltration rate through the pavement or pavers of 20-inches per hour. The design shall include a perforated pipe underdrain system, centered vertically in the reservoir course (drain rock) layer. Minimum perforated pipe size shall be 4-inch diameter. Pipe sizing and lateral spacing shall be based on pervious pavement size and individual site conditions. Provide emergency overflow or inlets to avoid flooding in case surface becomes plugged.

Minimum design criteria for pervious pavements for parking lots and vehicular travel ways are listed below. It is the responsibility of the design engineer to propose materials and sections that are appropriate for anticipated loadings and turning movements, and to locate pervious pavement in appropriate locations given individual site conditions. Permeable pavers are not approved for use within vehicular travel ways.

a. Pervious Asphalt. The pervious asphalt shall have a minimum1.5-inch thick 3/8-inch open-graded asphalt wearing surface, and a minimum 2.5-inch thick asphalt treated permeable base (ATPB) layer. Additional ATPB can count towards crushed aggregate reservoir course depth. Use PG70-22 asphalt binder for wearing surface and ATPB. Mix design shall require approval from the City Engineer.
    - 10-inches minimum crushed aggregate reservoir course. AASHTO No. 2 open-graded crushed rock (2.5”-1.5”) or approved equal with 40% void space. (Reservoir course depth may be increased and used for stormwater detention with approval of the City Engineer.)
    - Place non-woven geotextile over uncompacted subgrade.

b. Pervious Concrete. The pervious concrete pavement shall be a minimum of 6-inches of open-graded concrete. Mix design shall require approval from the City Engineer.
    - 12-inches minimum crushed aggregate reservoir course, AASHTO No. 2 open-graded crushed rock (2.5”-1.5”) or approved equal with 40% void space. (Reservoir course depth may be increased and used for stormwater detention with approval of the City Engineer.)
    - Place non-woven geotextile over uncompacted subgrade.

c. Permeable Pavers. Pavers shall meet standards for ASTM C936, Standard Specifications for Interlocking Concrete. Paver systems shall be installed per manufacturer’s recommendations with open surface spaces between half (½) inch and one (1) inch.
    - 10-inches minimum crushed aggregate reservoir course, AASHTO No. 2 open-graded crushed rock (2.5”-1.5”) or approved equal with 40% void space. (Reservoir course depth may be increased and used for stormwater detention with approval of the City Engineer.)
    - Place non-woven geotextile over uncompacted subgrade.

See Appendix E 10.05 *Design Guide Drawings* for additional design requirements for pervious pavement.

2. Green Roof. Depending on the configuration and structure of the roof, a vegetated green roof can be constructed to reduce a site’s total impervious area. A vegetated green roof is an impervious area reduction measure only and shall not receive runoff from adjacent areas. The structural roof support must be designed to accommodate the weight of the vegetated green roof. The green roof design must be low maintenance. Use of irrigation is allowed only to sustain the health of the vegetation. Design of the vegetated green roof

shall be according to most current standards of the City of Portland, Bureau of Environmental Services' Stormwater Management Manual. Green roofs will also require review and approvals from the Community Development Department, including the Building Division.

Vegetated Stormwater Quality Facilities (Filtration)

1. Street-Side Planter. Street-side planters are structural, vertical-walled, landscaped facilities located in the planter strip in a street right-of-way. They are designed to collect and treat stormwater runoff from the street, sidewalk, and, in many instances, adjacent properties. These facilities are envisioned more in commercial areas and on non-residential streets; however, their use is allowed in a residential subdivision setting.

   The street-side planter requires an 8-inch ponding depth below the gutter line elevation at the curb-notch entrance. Facilities are comprised of a layer of growing medium over a layer of drain rock. The soil surface shall be level to promote infiltration of stormwater throughout the entire surface of the facility. The elevation of the soil surface shall be called out on the construction plans. Check dams may be used to maintain required soil surface elevations while also maintaining facility length on steeper sites. A perforated pipe in the drain rock and the surface overflow system collect stormwater and direct it to the storm drain system.

   When planters are proposed adjacent to on-street parking, a step-out zone shall be provided. "No parking" designations shall not be used in lieu of constructing the step-out zone.

   On streets with a standard width landscape strip, the addition of a step-out zone will prohibit locating street trees within the facility. Therefore, all street tree requirements will need to be met outside of the facility area.

   Planter walls exceeding 40 feet in length require special design consideration for a keyed joint.

   Planters shall be designed such that the vertical height of walls and vegetation above ground do not interfere with required lines of sight.

2. Street-Side Shallow Swale. Street-side shallow swales are landscaped facilities located in the planter strip in a street right-of-way. They are designed to collect and treat stormwater runoff from the street, sidewalk, and, in many instances, adjacent properties. These facilities are envisioned for use in residential subdivisions and other low traffic volume settings. The primary advantages to their use in residential subdivisions are the preservation of on-street parking without constructed step-out zones, and they are generally easier to construct than planters. Their use in a location other than a residential subdivision requires the approval of the City Engineer.

   Street-side shallow swales have a 2.5-foot-wide bottom and side slopes; 3 horizontal:1 vertical adjacent to the street and 2 horizontal:1 vertical adjacent to the sidewalk. The street-side swale has a 5-inch ponding depth below the gutter line elevation at the curb-notch entrance. Facilities are comprised of a layer of growing medium over a layer of drain rock. The soil surface on the bottom of the facility shall be level to promote infiltration of stormwater throughout the entire length of the facility. The elevation of the soil surface shall be identified on the construction plans. Check dams may be used to maintain soil surface elevations while also maintaining facility length on steeper sites. A perforated pipe in the drain rock and the surface overflow system collect stormwater and direct it to the storm drain system.

3. Curb Extension Planters and Pods. Curb extension planters are essentially large street-side planters that utilize additional space within the roadway for treatment area rather than relying solely on the space within the landscape strip. They are designed to collect

and treat stormwater runoff from the street, sidewalk, and, in many instances, adjacent properties. These facilities are adaptable to most settings. They can be incorporated into a bulb-out at an intersection or constructed as midblock extensions.

The difference between standard curb extension planters and pods are that pods are smaller in scale and are intended only to supplement other post-construction stormwater quality facilities on a project. Their use is only envisioned in residential settings, on low traffic volume roads.

Similar to street-side planters, curb extension planters and pods have an 8-inch ponding depth below the gutter-line elevation at the curb-notch entrance (pods may also have a curb-notch exit, the ponding depth for treatment is set from the lowest curb-notch elevation). Facilities are comprised of a layer of growing medium over a layer of drain rock. The soil surface shall be level to promote infiltration of stormwater throughout the entire surface of the facility. The elevation of the soil surface shall be called out on the construction plans. Check dams may be used to maintain required soil surface elevations while also maintaining facility length on steeper sites. A perforated pipe in the drain rock and the surface overflow system collect stormwater and direct it to the storm drain system. Hybrid versions of these facilities that have some vertical walls, and some sloped sides (max 2.5:1 side slope) will be considered on a case-by-case basis. However, new sizing factors will need to be calculated specific to the proposed facility design.

Extensions into the roadway shall be as follows:

TABLE 3.04-A: Curb Extension

STANDARD ROADWAY WIDTH	INTERSECTION BULB-OUT	MID-BLOCK BULB-OUT
28-foot	3 foot	4 foot
30-foot or greater	4 foot	5 foot

For curb extension planters constructed as part of a bulb-out at the intersection of two residential streets, the minimum curb return radii shall be 20 feet. The minimum radii on all other street intersections shall be in accordance of Division D of these Engineering Standards. Separation between the nearest driveway and the bulbout shall be in accordance with the Albany Development Code.

The cross slope of the pavement between the centerline of the road and curb and gutter shall remain constant and shall not vary with the incorporation of curb extension planters.

Similar to standard curb returns, all curb return data around a curb extension planter or pod shall be summarized in a table on the construction plans. The table shall show the total length of the return, delta angle, curb radius distance, and stationing and elevations of the beginning, ¼ delta, ½ delta, ¾ delta, and end of the return.

In no instance shall the use of curb extension planters or pods on a new street result in a loss of 50% of on-street parking for the block they are being installed on, when compared to what would otherwise be provided.

Curb Extension Planter walls exceeding 40 feet in length require special design considerations for a keyed joint.

Curb extension planters shall be designed such that the vertical height of walls and vegetation above ground do not interfere with required lines of sight.

4. Onsite Planter. Onsite planters are structural, vertical-walled, landscaped facilities that could be located in parking lots, adjacent to buildings and pathways, courtyards or other site landscaping areas. They are designed to collect stormwater runoff onsite from private property. Onsite planters shall have a level soil surface to promote infiltration of stormwater throughout the entire surface of the facility. The elevation of the soil surface shall be shown on the construction plans. Check dams may be used to maintain soil surface elevations while also maintaining facility length on steeper sites. The onsite planter has a standard 6-inch ponding depth in the vegetation zone plus 2-inches of minimum freeboard that provides for overflows over check dams and flows to outlet structures (creating an 8-inch design treatment depth), and is underlain by soil media and drain rock layers. A perforated pipe in the drain rock and the surface overflow system collect stormwater and direct it to the storm drain system. See Appendix E 10.05 Design Guide Drawings for additional design requirements for onsite planters.

   When walkways are proposed adjacent to onsite planters, care shall be taken to minimize the vertical distance between the walkway and the designed soil surface. Structural protective measures, such as curbing, shall be incorporated into the design to physically separate pedestrians from the facility.

   Onsite planters shall be designed such that the vertical height of walls and vegetation above ground do not interfere with required lines of sight.

   Planter walls exceeding 40 feet in length require special design consideration for a keyed joint.

   In general, street-side planter design requirements will be used as a guide for reviewing similar components of proposed onsite planter designs.

   The maximum amount of impervious surface draining to each onsite planter shall be 20,000 square feet. Multiple facilities can be used to meet treatment requirements.

   Careful consideration shall be given to the overflow design. These facilities are only intended to handle the water quality storm. It is the design engineers responsibility to ensure that larger storm events are also appropriately considered in the site design.

   Since these facilities will be constructed on private property, land use approvals and building permits may be required from the Community Development Department.

   All vehicular and pedestrian safety (including ADA) requirements shall be incorporated into onsite designs. It is the property owner and design engineers responsibility to ensure that these requirements are met. Public Works review of private facility design is limited to stormwater quality functions.

5. Onsite Swale. Onsite swales are shallow, vegetated depressions with side slopes (maximum 3 horizontal:1 vertical) and a 2-foot-wide bottom that is flat, with no grade. The elevation of the soil surface shall be shown on the construction plans. Check dams may be used to maintain soil surface elevations while also maintaining facility length on steeper sites. Swales may be located in parking lots and other site landscaping areas. They are designed to collect stormwater runoff onsite from private property. The onsite swale has a standard 6-inch-ponding depth in the vegetation zone plus 2 inches of minimum freeboard that provides for overflows over check dams and flows to outlet structures (creating an 8-inch design treatment depth), underlain by soil media and drain rock layers. A perforated pipe in the drain rock and the surface overflow system collect stormwater and direct it to the storm drain system. See Appendix E 10.05 Design Guide Drawings for additional design requirements for onsite swales. Sizing factors for onsite swales are based on 3:1 side slopes and the identified bottom width, and an 8-inch treatment depth. Any variation from these standards will require calculation of a facility-specific sizing factor.

If walkways are proposed adjacent to these facilities, the design engineer will need to consider whether additional measures are required, such as curbing, to separate the walkway from the side slope on the stormwater quality facility. When parking is proposed adjacent to these facilities, curbing or wheel stops are required to prevent vehicles from accidently driving into the facility.

The maximum amount of impervious surface draining to each onsite swale shall be 20,000 square feet. Multiple facilities can be used to meet treatment requirements.

Careful consideration shall be given to the overflow design. These facilities are only intended to handle the water quality storm. It is the design engineers responsibility to ensure that larger storm events are also appropriately considered in the site design.

Since these facilities will be constructed on private property, land use approvals and building permits may be required from the Community Development Department. All vehicular and pedestrian safety (including ADA) requirements shall be incorporated into onsite designs. It is the property owner and design engineers responsibility to ensure that these requirements are met. Public Works review of private facility design is limited to stormwater quality functions.

Manufactured Stormwater Quality Facilities

1. Manufactured Facilities. If manufactured treatment facilities are approved for use, the type of facility to be installed must be approved by the City Engineer. The treatment device shall be designed and installed according to the manufacturer's recommendations.

   Since these facilities may be constructed on private property, land use approvals and building permits may be required from the Community Development Department.

B. Inlets, Outlets, and Overflows:

Facility Inlets

1. Curb Notches. The station and invert elevation of each curb notch shall be identified on the construction plans. Curb notches shall be spaced to assure that flow along the gutter line can be intercepted by post-construction stormwater quality facilities during the water quality design storm. Curb notches are typically located at the upstream end of each facility, or cell, within a multi-cell facility that is divided by check dams. However, the maximum length between curb notches is 30 feet on a single cell facility, or within the same cell on a multi-cell facility. If a facility or cell has more than one curb notch serving it, the elevations of each notch must be set such that the anticipated treatment (ponding) depth within the facility will not short-circuit. Deviations in the maximum elevation between the curb/sidewalk and the soil surface to accommodate additional curb notches requires the approval of the City Engineer.

   In some instances, it may be desirable to also place a curb notch at the downstream end of the last facility along a block length in order to capture and treat all of the water along the project. These instances will require similar reviews and approvals for elevation changes as described in the preceding paragraph.

2. Sidewalk Drainage Notch. Four (4)-inch sidewalk drainage notches shall be placed in the exposure of planter walls (planters, pods, and extensions) adjacent to the sidewalk to assure that the flow from sidewalk can be intercepted and ponding on the sidewalk does not occur during the design storm event. Notches shall typically be centered on sidewalk panel joints every 10 to 15 feet, or one per cell of a multi-cell facility, but in no case shall the spacing exceed 20 feet.

3. Sediment Traps. Some locations within the public right-of-way have higher sediment loads than others. High sediment load areas can be problematic for post-construction stormwater quality facilities by "clogging" the soils and reducing overall infiltration.

This results in increased maintenance costs and a reduced service life for the facility. To avoid this situation, sediment traps can be incorporated into the inlet design. Sediment traps may be required by the City Engineer in the following locations:

a. Facilities on high traffic volume streets (arterials and collectors).

b. Facilities adjacent to, or immediately downstream of, unimproved roads or lots.

c. Facilities located in, or immediately downstream of, the Hillside Development Overlay District as shown in the Albany Development Code.

d. Other locations identified by the City Engineer as having a potential for high sediment loads.

4. Roof Drains. Roof drains should connect to the street at the standard curb and gutter location. Locations of connections shall be shown on the construction plans. Direct connection of roof drains to post-construction vegetated stormwater quality facilities is discouraged and requires approval from the City Engineer.

Facility Outlets and Overflows

1. Underdrain System. The primary outlet for post-construction stormwater quality facilities is through the underdrain system. Flow is collected in the underdrain system and routed to the standard stormwater collection system. Methods of connection include:

   a. Connection to an adjacent curb inlet.

   b. Stormwater lateral connection to standard piped stormwater system.

   c. Connection to the underdrain system on an adjacent facility. This option may be considered when two facilities are located on the same side of the street and separated by a short distance, such as a driveway width. The purpose of such a connection would be to reduce, or eliminate, the use of stormwater laterals. When connecting to adjacent facilities the ability of the underdrain system to accept the additional flow will need to be verified.

   **Invert elevations and stationing shall be shown for all points of connection.

2. Overflows. All post-construction stormwater quality facility designs shall incorporate an overflow system in the event the stormwater facility temporarily fails or rainfall exceeds the stormwater quality design storm. The overflow system shall be designed to maintain public safety and avoid property damage. Overflow elevations shall be identified on the construction plans.

   a. Street-Side Facilities. A small overflow shall be incorporated into the cleanout at the downstream end of the facility. The overflow shall be fitted with an atrium grate sized to the pipe to protect the perforated drain pipe system from debris and sediment. This overflow will supplement the primary overflow, which is also the inlet on most street-side facilities. Larger overflow structures will be required when escape/overflow to the street and a standard stormwater collection/conveyance system is not feasible.

   b. On-Site Facilities. Overflow systems may include an overflow structure similar to street-side facilities and/or, when approved, storage in parking lots or landscaping areas. Flow routing shall be identified on the construction plans to illustrate where flood conditions or ponding is expected to occur during larger rain events.

3. Cleanouts & Laterals. Stormwater cleanouts and laterals shall conform with all requirements outlined in the City of Albany Engineering Standards, Division C as applicable.

C. Liners.

1. Unless required by this section or otherwise required by the City, vegetated stormwater quality facilities and pervious pavement shall be designed and constructed to allow incidental infiltration into underlying native soils. As such, the use of liners is not allowed except as required below.

2. Impermeable liners are required for the following site conditions:

   a. Steep Slopes. Facilities located on slopes > 12% and facilities located closer to the top of the slope than the vertical height of the slope area that is >12%.

   b. Landslide Areas. Facilities located 200 feet or closer to known landslide-prone areas.

   c. Set-backs. Facilities located within 10 feet of habitable structures. Facilities within 5 feet of a property line when the invert of the underdrain piping is at a higher elevation than the ground surface on the adjacent property.

   d. Contaminated Soils. Facilities located on or within 50 feet of contaminated soils as defined or identified by Oregon Department of Environmental Quality in the Environmental Cleanup Site Information (ECSI) database. Note: presence of certain contaminants may prohibit the construction of post-construction stormwater quality facilities, even with liners.

   e. Contamination Risk Areas. Post-construction stormwater quality facilities are not designed to replace required containment or other source control measures. Regardless, impermeable liners are required for post-construction stormwater quality facilities that will receive drainage from or are adjacent to loading docks, refueling areas, areas of hazardous and toxic material storage or handling, and/or materials storage or handling areas.

   f. Fill Areas. Facilities located on fill soils deeper than 5 feet as measured from the highest finish grade adjacent to the proposed facility and the lowest existing grade under the proposed facility. Note: liner may not be required if a stamped geotechnical report for site fill conditions is submitted and indicates suitable stability for unlined facilities.

3. When required, impermeable liners shall be shown on the construction plans and be constructed to underlay all areas of the facility that are at or below the overflow elevation for the water quality design storm.

4. Perforated underdrain pipes shall be located at the bottom of the drain rock and above the impermeable liner, in facilities with impermeable liners.

D. Check Dams. Check dams shall be used to create multi-cell facilities when street slopes and facility lengths prevent having one continuous facility with a flat soil surface in all directions. Check dams may similarly be used for onsite planters and swales as needed to accommodate site slope and grading conditions.

1. General:

   a. Provide elevations and stationing and/or dimensioning for check dam locations.

   b. In a standard installation, each cell will have a curb-notch inlet at the upper end of each cell and a check dam at the lower end of the cell (except for the final cell). The check dam elevation for each cell shall be set at the same elevation as the lowest elevation of the depressed opening for the curb-notch inlet contributing to that cell. The City's *Standard Construction Specifications* provide a drawing depicting the vertical relationship between inlets and check dams for multi-cell facilities.

c. Check dam elevations shall not cause stormwater to overflow to sidewalk.

d. Table 3.04-B provides check dam spacing requirements by street slope. Spacing is based on providing 4 inches of clearance between top of each check dam and the top face of curb.

TABLE 3.04B: Check Dam Spacing

STREET SLOPE	ON CENTER SPACING
1%	35 feet
2%	19 feet
3%	13 feet
4%	11 feet
5%	9 feet
6%	8 feet
>6%	Too steep for post-construction stormwater quality facilities

E. Utility Crossings

1. General:

a. Utility crossings under street-side, post-construction stormwater quality facilities are discouraged and only allowed on a case-by-case basis.

b. When crossings are necessary, one (1) foot of clearance shall be provided between the bottom of post-construction stormwater quality facility and the crossing utility.

2. Water Services:

a. Water services should cross a standard landscape strip section whenever possible. When that isn't possible, services should be placed in the driveway rather than under a post-construction stormwater quality facility.

b. Water service lines shall be located no closer to curb extensions than the point of tangency.

F. Hydrant Clearance. No hydrant shall be placed closer than 5 feet to a post-construction stormwater quality facility.

G. Relationship to Street Cross Slope. The integration of street-side, post-construction stormwater quality facilities in the right-of-way shall not change the underlying street cross slopes, including those between the sidewalk and the top face of curb.

H. Relationship to Sidewalk Location and Timing of Construction

1. Location. The sidewalk is typically positioned within the right-of-way such that there is a 6-inch space between the back of sidewalk and the adjacent property line. Several of the post-construction stormwater quality facilities are of such a width that they push the sidewalk 6 inches closer to the property line; therefore, the back of walk is coincident with the property line. The sidewalk should be in a consistent location on a block-by-block basis. Within a given block, the sidewalk should not transition locations as it transitions in and out of being adjacent to facilities.

2. Timing of Construction. Generally, sidewalk construction cannot be deferred on projects involving construction of post-construction stormwater quality facilities. Although the size and location of driveways must be identified on the construction plans, the City engineer may allow deferral of driveway construction until construction of other on-site improvements.

E 3.05 LANDSCAPE REQUIREMENTS

A. Applicability. The main purpose of vegetation in stormwater quality facilities is to provide the maximum amount of water quality benefit for stormwater management. This section addresses the landscape requirements that apply to the design (planting plans) of vegetated post-construction stormwater quality facilities in the City of Albany. Planting plans are an important mechanism to ensure the proper selection and installation of vegetation in these facilities. The objectives of these standards are:

1. Provide adequate plant coverage.
2. Provide information on placing plants in the proper location per varying context factors.
3. Encouraging plant diversity.
4. Maintaining some year-round foliage.
5. Provide information on how to sustain clear lines of sight/access.
6. Accommodate tree/street tree requirements.

B. Moisture Zones. Careful consideration of the soil moisture conditions within a stormwater facility will help to ensure the success of a planting design. Planting conditions for vegetated stormwater quality facilities with side slopes (e.g. swales) have a variety of moisture levels from dry to wet. Soil conditions at and near the bottom of the facility can be wet due to frequent or constant inundation, and side slopes vary from wet at the bottom to relatively dry near the top. The moisture gradient varies with the designed maximum water depth, the time it takes for a facility to drain after a storm event, and the steepness of the side slopes. The zone from the bottom of the facility to the designed high water line (the designed treatment area) should be planted with plants that tolerate occasional standing water and wet-to-moist conditions. Above the designed high water line vegetation is not affected by stormwater entering the facility and should be planted with species well-suited to the local climate and site-specific conditions (i.e., solar aspect, micro climate, etc.). Planting conditions are more uniform for vertical-walled planters because of the relatively uniform and flat surface.

Vegetation for post-construction vegetated stormwater facilities is categorized according to the degree of soil moisture that will be encountered in the facility during the growing season. Consideration of these zones will enhance the success of a facility's planting design. See Figure E 3.05-A. The figure depicts two different zones:

- Moist (Zone A): periodically saturated; anaerobic and/or aerobic soils
- Dry (Zones B): infrequent inundation/saturation, if any; aerobic soils

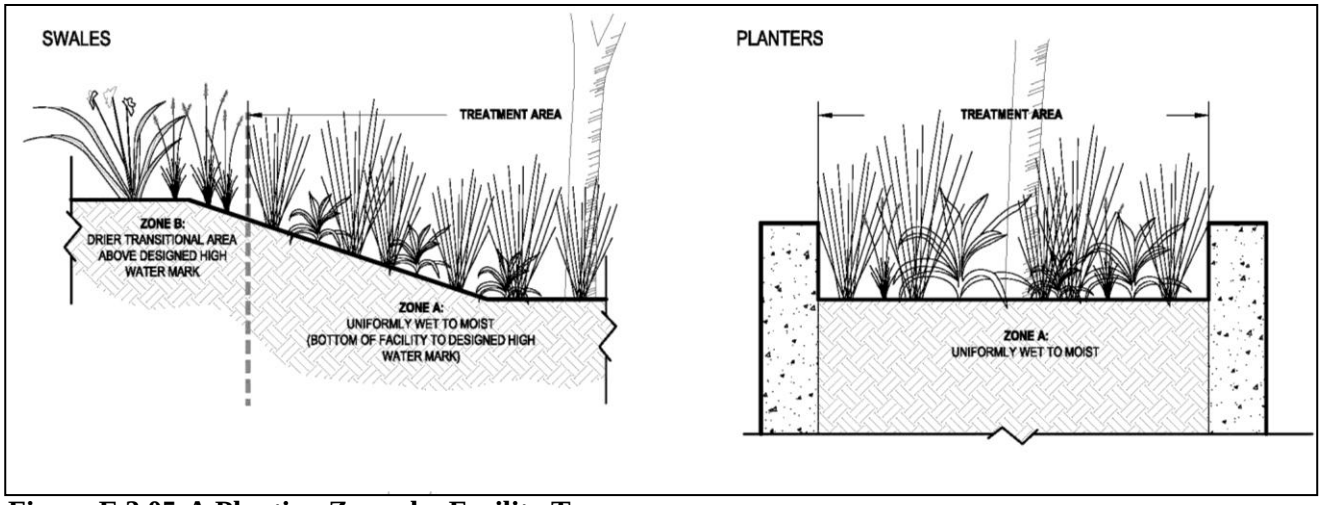

Figure E 3.05-A Planting Zones by Facility Type

C. Planting Plan Requirements. Planting plans are required for design and construction of post-construction stormwater quality facilities. At a minimum, planting plans shall provide the following:

- Scaled planting plan sheets identifying the location of the facilities within the project limits with call-outs to applicable planting diagrams and tables.
- A dimensioned planting diagram for each facility with each plant type assigned its own symbol. See Appendix E 10.03 Planting Matrix & Example Planting Diagrams for guidance.
- Planting table that identifies quantities and documents the common name, scientific name, category (herbaceous, small shrub, etc.), distribution (zone and spacing), condition (container, B&B, etc.) and size of planting for each facility. Quantities shall be based on the typical on-center spacing (which is the maximum spacing) listed on the plant matrices.
- Planting legend.
- Installation methods for plant materials.
- Recommended long-term irrigation plan, including identification of water source and maintenance of the system, if applicable.
- Any additional recommendations from what is already required in Albany's *Standard Construction Specifications* for irrigation, weeding, and pruning during the establishment/warranty period.
- References to applicable portions of Albany's *Standard Construction Specifications* for growing medium, surface treatments, timing for plantings, and installation requirements.

D. Plant Selection. The City of Albany's approved plant lists are provided in Appendix E 10.03 Planting Matrix & Example Planting Diagrams by facility type. Each planting list includes a suitability matrix for limiting contextual factors (such as location and width of facility) as well as a listing of specific characteristics for each species, such as an indication of the appropriate moisture zone, if it is native to the area, if it is evergreen, its average height and a recommended on-center spacing. These plant matrices provide a short list of plants that are appropriate for the stormwater facilities in a variety of conditions. Other plants may be approved if they meet the criteria for type/width of facility, condition, location, size of plant material at maturity, etc.

E. Landscape Design Requirements:

1. Quantities. Plant quantities shall be as follows. All quantities are listed on a per 100 square feet of facility area.

   a. Street-side Facilities:
      - 6 small shrubs / 100 square feet
      - The remainder of the area must be planted with groundcover/herbaceous plants in swales and herbaceous plants only in planters. The plants must be spaced to cover the area within 3 years. Plant spacing guidance is provided in planting matrices in Appendix E 10.03 Planting Matrix & Example Planting Diagrams.

   b. Onsite Facilities:
      - 3 large shrubs, 4 small shrubs / 100 square feet*
      - The remainder of the area must be planted with groundcover/herbaceous plants in swales and herbaceous plants only in planters. The plants must be spaced to cover the area within 3 years. Plant spacing guidance is provided in planting matrices in Appendix E 10.03 Planting Matrix & Example Planting Diagrams.

      * Onsite facilities located in areas where sustained lines of sight are required shall have ONLY small shrubs with the remaining area planted with groundcover/herbaceous plants, as applicable. In these locations, instead of 3 large shrubs and 4 small shrubs, 6 small shrubs per 100 square feet shall be required.

2. Tree Requirements:

   a. Street-side Facilities:
      - Street trees must be incorporated as necessary to minimum street tree spacing requirements. Where street tree installation is not feasible, such as in street side planters with step-out zones or lined facilities, street tree requirements must be met outside of the post-construction stormwater quality facility.
      - Street tree installations should be kept in line along a block length by holding the same distance off centerline regardless of whether the tree is placed in a standard planter strip, a street-side stormwater quality facility, or a curb extension.
      - Street trees shall not be planted in clear vision areas or otherwise interfere with required sight distances, including intersections and railroad crossings.
      - Trees are not allowed in lined facilities.

   b. Onsite Facilities:
      - In Moisture Zone A, one (1) tree per 100 square feet of facility area is required, or the number of the trees per applicable Development Code requirements, whichever is of greater quantity.
      - Trees are not allowed in lined facilities.
      - Planters less than or equal to 3-feet wide require special consideration to tree selection. See planting matrices in Appendix E 10.03 Planting Matrix & Example Planting Diagrams for trees identified as appropriate for this application.

3. Size. Minimum plant size at installation:

Herbaceous Plants:	4-inch pot container
Small Shrubs/Groundcover:	1-gallon container
Large Shrubs:	30-inch height
Deciduous Trees:	1-inch caliper; 2 ½-inch caliper if street tree
Evergreen Trees:	7-feet height

4. Each facility shall have a minimum of 50% evergreen plants, by number.
5. Each facility shall have at least two species from the Herbaceous plant community.
6. Placement of vegetated stormwater facilities within a Natural Resource Overlay District is only allowed as specified in the Albany Development Code. Additional requirements for plant selection, such as the use of native vegetation, may be applicable.
7. Deep rooting trees and shrubs shall not be planted in lined facilities, on top of public utilities, or within 10 feet of retaining walls, inlet/outlet structures or other culverts. See planting matrices in Appendix E 10.03 Planting Matrix & Example Planting Diagrams for suitable plants in these locations.
8. Street-side shallow swales shall have a 12-inch groundcover zone from back of curb. In this zone, only low groundcover that can withstand foot traffic shall be planted. All groundcover plants in the plant matrix meet this requirement.

E 3.06 OPERATION & MAINTENANCE

A. Maintenance Required. In order to function for their intended purpose over the long term, post-construction stormwater quality facilities must be periodically maintained. Public facilities will be maintained by the City of Albany. Private facility maintenance shall be the responsibility of the property owner.

Per Title 12 of the Albany Municipal Code, private post-construction stormwater quality facilities require that the owner sign a Private Stormwater Facilities Operation and Maintenance (O&M) Agreement with the City, committing the owner, and future owners, to certain operation and maintenance activities. The standard Operations and Maintenance Agreement and required operations and maintenance activities are located in Appendix E 10.04 Operations & Maintenance Agreement and Checklists. The operations and maintenance practices have been adapted from the ***Clean Water Services – Low Impact Development Approaches Handbook.***

Appendix E 10.04 Operations & Maintenance Agreement and Checklists does not provide maintenance checklists for manufactured facilities. Manufactured facilities shall be maintained according to manufacturer's recommendations.

E 4.00 – STORMWATER QUANTITY MANAGEMENT DESIGN & CALCULATIONS

E 4.01 GENERAL REQUIREMENTS

Storm drainage design within a development area must include provisions to adequately control runoff from all public and private streets and the roof, footing, and area drains of residential, multifamily, commercial, or industrial buildings, and to insure future extension of the drainage system to the entire drainage basin in conformance with the AMC and adopted Stormwater Management Plans. Control of both water quantity and quality shall be included as part of the design considerations. Provisions that must be met are:

A. Surface or subsurface drainage, caused or affected by the changing of the natural grade of the existing ground or removal of natural ground cover or placement of impervious surfaces, shall not be allowed to flow over adjacent public or private property in a volume and/or rate or location materially different from that which existed before development occurred, but shall be collected

and conveyed in an approved manner to an approved point of disposal. Requirements of the Albany Building Division shall also be met regarding alteration of drainage patterns.

B. Surface water entering the subject property shall be received at the naturally occurring locations and surface water exiting the subject property shall be discharged at the natural locations with adequate energy dissipators within the subject property to minimize downstream damage and with no diversion at any of these points.

C. The approved point of discharge for all stormwater may be a storm drain, existing open channel, creek, detention, or retention pond approved by the City Engineer. Acceptance of suggested systems will depend upon the prevailing site conditions, capacity of existing downstream facilities, and feasibility/maintainability of the alternate design.

D. When private property must be crossed in order to reach an approved point of discharge, it shall be the developer's responsibility to acquire a recorded drainage easement (dedicated to the City) from the private property owner meeting the approval of the City Engineer. The developer must secure all signed easement documents from private property owners prior to final plan approval.

E. The peak discharge from the subject property may not be increased from conditions existing prior to the proposed development except where it can be satisfactorily demonstrated by the applicant that there is no adverse impact.

F. Retention/detention facilities must be provided in order to maintain surface water discharge rates at or below the existing design storm peak discharge except where it can be demonstrated by the applicant that no adverse impact will result from not providing said facilities. A basin analysis may be required to assure that the detention system does not adversely impact the operation of the storm drain system it is discharging to.

G. All storm drain system designs (conveyance, flow restrictions, detention) shall make adequate provisions for collecting all stormwater runoff. The system shall accommodate all runoff from upstream tributary areas whether or not such areas are within the proposed development. The amount of runoff to be accommodated shall be based upon ultimate development of all upstream tributary areas.

   Proposed storm drain systems shall not discharge flows into inadequate downstream systems unless approved by the City Engineer.

H. An erosion control plan shall be developed for all phases of the project construction to protect downstream waters and minimize erosion.

I. Stormwater quality enhancements are encouraged and stormwater quality Best Management Practices (BMPs) shall be incorporated into the design.

J. All other State and Federal permitting requirements must be met. The Developer shall produce copies of approved permits for the City prior to final plan approval.

E 4.02 RUNOFF CALCULATIONS AND SYSTEM CAPACITY

Calculations for storm drain design shall be submitted with all storm drain improvement projects. Calculations shall clearly show how flows were calculated and also how the proposed storm system is capable of conveying these flows. For projects that require detention, full pre-development and post-development calculations shall be submitted.

Basin maps shall be submitted with all calculations and shall show clearly how stormwater is being routed through the improvements.

A. Rational Method. The rational method is an acceptable way to calculate peak discharge for the sizing of storm drainage conveyance systems for laterals and collector systems in which detention is NOT required. It may NOT be used to size detention systems or trunk lines or for projects that are greater than 100 acres in size. Refer to Section E 4.02.D Drainage System Capacity to determine which design storm the improvement must convey.

Equation $Q = C * i * A$

Where:

- **Q** *is peak flow in cubic feet per second.*
- **C** *is a runoff coefficient determined by ground cover. The engineer must document the methodology used in determining the value proposed.*
- **i** *is rainfall intensity in inches per hour. Rainfall intensity found on the ODOT Zone 7, I-D-F curve (*see Section E 10.02-B - Appendix*) shall be used. For the rational method, the basin time of concentration is used as the storm duration. The time of concentration must first be calculated (*see Section E 4.02.C Time of Concentration*), then the rainfall intensity can be read from the I-D-F curve.*
- **A** *is the basin area in acres.*

B. Basin Hydrographs. Trunk lines and all improvements that require detention shall be designed only after a full analysis of the basins contributing to the improvements is completed. Hydrographs for all basins shall be developed.

The City standard for hydrograph development is the Soil Conservation Service (SCS) TR-20 methodology. Analysis can be done using computer software that uses the TR-20 methodology for developing hydrographs or it can be done manually using the TR-55 methodology. If a software package is used, documentation of the software's processing and methodology shall be submitted with the results. All input and assumptions shall be clearly documented.

The input information needed for the TR-20 methodology is:

- Time of Concentration (see E 4.02.C Time of Concentration)
- Curve Number (CN) – The CN takes into account the ground cover and the soil type. County soil surveys shall be used to determine the soil type. The SCS "Urban Hydrology for Small Watersheds" handbook shall be used in determining the hydrologic classification for soils. Most soils in Albany are group "C" or "D."
- Rainfall distribution – Albany has a Type IA rainfall distribution.
- Total 24-hour Rainfall – See Section E 10.01 – 24-Hour Rainfall for Albany
- Basin Area

C. Time of Concentration. Time of concentration is a very important variable in determining runoff volumes and peak flows. Time of concentration calculations shall be submitted for review.

There are three components that shall be considered when determining time of concentration: sheet flow, shallow concentrated flow, and channel/pipe flow. Each of these should be calculated separately and then added together to determine the basin time of concentration.

1. Sheet Flow. This is the first leg of runoff. It is generally accepted that sheet flow only occurs for a maximum of 300 feet before the flow regime turns to shallow concentrated flow. Sheet flow shall be calculated using the Manning's kinematic solution:

$$T_t = 0.007(nL)^{0.8} / (P_2)^{0.5} S^{0.4}$$

Where: T_t = Travel Time (hours)
n = Manning's n
L = Length of flow (feet)
P_2 = 2-year, 24-hour rainfall (inches)
S = Slope (feet/foot)

2. Shallow-Concentrated Flow. To determine the flow time of runoff in the shallow-concentrated flow regime, you need to estimate the flow velocity. Use the figure in Section E 10.02 – Appendix in determining the flow velocity of the shallow

concentrated flow. Once the velocity is estimated, divide the distance of flow by velocity to get flow time.

3. Channel/Pipe Flow. Use Manning's equation to calculate velocities in the channels and pipes, then divide flow length by velocity to get flow time.

The three runoff flow components shall be added together to determine the total time of concentration. A map showing the assumed flow path shall be provided with the time of concentration calculations.

D. Drainage System Capacity. For design purposes, it is necessary to define the various parts of the storm drainage system and to specify the magnitude of flow that each part must be capable of carrying.

Pipes, culverts, and ditches shall be designed to convey the peak discharge of the storm shown in the table below.

TABLE E 4.02-A

Element	Definition	24-Hour Design Storm
Catch Basins/Inlets	Catch basins and inlets located within roadways.	10 year
Feeder	Pipe/ditch of any size that serves a private development or single subdivision of 5 acres or less.	10 year
Collector	Pipe/ditch of any size that serves multiple private developments/subdivisions or a single private development or subdivision equal to or greater than 5 acres within the same drainage sub-basin.	25 year
Trunk	Drainage improvements that serve more than 100 acres and/or multiple drainage sub-basins as defined in the City's Stormwater Master Plan(s) or as otherwise required by the City Engineer.	50 year

E 4.03 SUPPORTING DATA

A. Background computations for sizing drainage facilities shall include:

1. Peak discharge rate and volume of surface water for the design storm currently entering and leaving the subject property; or if the City Engineer determines that the property is in an interim flood hazard area, then a 50-year storm shall be used.

   Discharge volumes shall be computed for both the current land use conditions and full development of the tributary basin area.

2. Peak discharge and rate of runoff that will be generated within the subject property due to the design storm after development occurs.

3. Peak discharge and rate of runoff that will be generated by the design storm at all naturally occurring points of discharge from the property (cubic feet per second, predevelopment, and post-development). For projects that require detention, 2-year, 5-year, 10-year, and 25-year storms must be analyzed.

4. The proposed methods of handling, storing, and discharging of peak loads:

   a. Proposed improvement for handling the computed runoff, including the location and capacity of all natural or proposed drainage facilities and easements. The

method of discharging storm drainage offsite at the naturally occurring location and provisions needed to control the velocity, volume, and direction of the discharge in order to minimize damage to other properties, stream banks, and overall water quality.

b. Drawings of proposed open channel and closed conduit system to be shown on construction drawings.

   i. Proposed cross-section of the channel with stable side slopes shown on the plan.

   ii. For open channel improvements, the water surface elevation (backwater curve) of the flow for the design storm shall be indicated on the cross-section.

   iii. For closed conduit improvements, the hydraulic grade line (HGL) of the flow for the design storms shall be indicated on the cross-section.

E 5.00 – PIPES AND CLOSED CONDUIT

E 5.01 GENERAL

All storm drains shall be laid on a consistent and uniform grade as specified in the latest edition of **Albany's** *Standard Construction Specifications***.** Changes in piping size and grade shall only occur at manholes. All pipes and closed conduit materials shall conform to the *Standard Construction Specifications*. Joints shall have gaskets and be water tight.

E 5.02 PIPE SIZE

The minimum size for storm drains shall not be less than 10 inches inside diameter and shall begin at a structure and shall terminate at an approved point of disposal. Proposed exceptions to the above will be reviewed and considered for approval on a case-by-case basis by the City Engineer of Public Works. When 2 parallel pipes are installed in-lieu-of one large pipe or a box culvert, the minimum separation between the pipes shall be one (1) foot or one-third the diameter of the largest diameter pipe, whichever is greater. This requirement may be waived if the void between the pipes below the spring line is filled by grouting or other approved method/substance.

E 5.03 GRADE

All storm drains shall be laid on a grade that will produce a mean velocity (when flowing full) of at least 3 feet per second, based upon Manning's pipe friction formula using a roughness coefficient valued at not less than 0.01, or the pipe manufacturer's recommendations, whichever is greater.

The minimum grade may be reduced to produce an absolute minimum velocity of 2.0 fps upon approval of the City Engineer. But the grade of any pipe, regardless of diameter, shall not be less than .002 feet per foot unless otherwise authorized by the City Engineer. Other cases requiring a flatter grade than permitted above shall also be reviewed on a case-by-case basis for approval by the City Engineer.

Engineers are cautioned not to specify storm drains of sizes that are obviously larger than is necessary for satisfactory carrying capacity, but which are specified solely in order to meet grade requirements, i.e., a 12-inch pipe for a 10-inch pipe to acquire a decrease in slope.

The maximum grade for storm drains will generally be limited such that pipeline velocities when flowing full do not exceed 15 feet/second. If, out of necessity, velocities greater than this will result, ductile iron piping shall be used. Outside drop manholes with flatter pipe slopes can also be used.

E 5.04 ALIGNMENT

Generally, storm drains shall be laid on a straight alignment between catch basins and between manholes:

A. Where storm drains are being designed for installation parallel to other utility pipe or conduit lines, the vertical location shall be in such a manner that will permit future side connections of main or lateral storm drains and avoid conflicts with parallel utilities without abrupt changes in vertical grade of main or lateral storm drains. Location within easements or right-of-ways shall be in accordance with the *Standard Construction Specifications*. A minimum separation of 10 feet shall be maintained between storm drain lines and all other public utilities.

B. Under normal conditions, storm drains shall be located in the street right-of-way 10 feet from the centerline and preferably on the low side and on the south and west sides of the street, except when curb inlet locations warrant otherwise. Piping between curb inlets and storm drain lines shall be at near right angles to the street and other utility lines. All exceptions shall be reviewed on a case-by-case basis for approval.

C. Easement locations for public storm drains serving a public utility district (PUD), apartment complex, or commercial/industrial development shall be in parking lots, private drives, or similar open areas that will permit an unobstructed vehicle access for maintenance by City forces.

D. Easements must be furnished to the City for review and approval prior to recording. The City will record the easements after City Council acceptance. Each easement shall be according to the City's standards.

E 5.05 COVER REQUIREMENTS

Storm drains shall be at a minimum depth of 3 feet or greater below the finish grade elevation. Minimum pipe depth shall be measured between the finished surface grade at the centerline of the storm drain and the top of storm drain pipe. Storm drains at depths less than this create problems with water line crossings, sewer lateral crossings, and proper cover over the pipe per manufacture's recommendations. Fill may be required on development sites to maintain adequate cover over sewer lines.

In some extreme locations where flat terrain limits the extension of storm drains, the City Engineer may allow some pipeline configuration changes as well as alternate pipe cover depths in conjunction with site filling. Storm drain pipes with depths less than 3 feet, where allowed by the City Engineer, shall be connected from catch basin to catch basin in lieu of the use of manholes. Special pipe material such as ductile iron pipe (down to 30-inches of cover) or reinforced concrete pipe (down to 18 inches of cover) will be required.

In areas of flat terrain, the design engineer must show that sufficient depth is provided at the boundary of the development to properly drain the remainder of the upstream basin area tributary to the site or that other drainage options are available to the upstream property.

E 6.00 – INLETS, OUTLETS, CONNECTIONS

E 6.01 CURB INLETS

A. Curb inlet basins may be connected together (maximum of 4) at intersections to minimize the number of pipe crossings of the streets and number of manhole penetrations required. Curb inlet piping shall be connected to the storm drain system at manholes.

B. Inlets shall be spaced to assure that the flow in the streets can be intercepted and no ponding in the street occurs during the design storm. However, the maximum total length of curb and gutter that may be drained by a curb inlet is 400 feet. Curb inlets shall be located on the upstream side of curb returns. In addition, catch basins shall be installed where street improvements end on a descending grade and shall be piped to an approved point of disposal.

C. The width of gutter flow on local streets shall not exceed 8 feet from face of curb or top the curb for a 10-year design storm at any point along the street. Width of flow on other street classifications shall not extend into the travel lanes or overtop the curbs for a 25-year design storm at any point along the street.

D. Curb inlets on local streets shall be designed to completely intercept the 10-year design storm gutter flow. Curb inlets on all other street classifications shall be designed to completely intercept the 25-year design storm gutter flow.

E. Curb inlets shall be located so as not to interfere with other construction elements (e.g., driveways, pedestrian ramps, etc.). Exceptions will be considered on a case-by-case basis.

E 6.02 SURFACE DRAINAGE INTERCEPTION

Inlet structures shall be built wherever a surface drainage (creek/ditch/swale) is intercepted and placed into a piped system. The inlet structure shall be concrete. All inlet structures for pipes shall have grating covering the inlet. The grate shall have the bars oriented in the vertical direction. The inlet grate shall be removable.

The invert of the inlet structure shall be at or below the invert of the drainage being intercepted. The inlet shall be designed to accommodate the anticipated peak flows of the surface drainage at the design storm outlined in Table E 4.02-A.

Special attention shall be paid to where water will accumulate and flow should the inlet become clogged or blocked. In sensitive areas, accommodations for overflows caused by inlet clogging shall be made such that the overflow does not damage downstream areas.

E 6.03 SLOPE INTERCEPT INLETS

Slope intercept drains shall be provided at the following locations:

A. Along the upper boundaries of a development where the natural ground slope exceeds 10% to intercept drainage from the tributary area above the site.

B. Along the lower boundary of a development where the natural ground slope exceeds 10% to prevent drainage onto a lower tributary area other than by means of an approved point of disposal.

C. Along the top of all cuts that exceed 4 feet with cut slopes that exceed 2:1 where the tributary drainage area above the cut slopes towards the cut and has a drainage path greater than 40 feet, measured horizontally.

E 6.04 SUBSURFACE DRAINAGE INTERCEPTION

Subsurface drains (underdrains) shall be provided at the following locations:

A. On all cut and fill slopes in excess of 4 feet for stability except when a soils report submitted by a registered professional engineer experienced in soils certifies they are not required.

B. For all existing springs or springs intercepted during construction activity for other facilities, i.e., sewer, water mains, or street excavations.

C. Where high ground water exists or when it is necessary to reduce the piezometric surface to an acceptable level to prevent land slippage or underfloor flooding of buildings.

The drainage line installed shall begin at a cleanout and terminate at an approved point of discharge. Open-jointed storm drain lines will not be considered as an acceptable solution.

E 6.05 OUTLETS INTO SURFACE DRAINAGE CHANNELS

Storm drain lines shall enter a creek or drainage channel at 90° or less to the direction of flow. The outlet shall have a head wall and scour pad or riprap to prevent erosion of the existing bank or channel bottom. All outlet structures for pipes of 24 inches in diameter or greater shall have grating covering the outlet. The grate shall have the bars oriented in the vertical direction. Outlet grates shall be attached to the outlet structure with a hinged connection at the top of the grate.

The outlet shall not intrude into the channel and reduce flow capacity of the channel. Pipe ends shall be beveled to match the side slope of the channel. Energy dissipation measures and armament of the

opposite channel bank are required at the outlet. The size of the receiving facility will govern what protective measures are required

Backflow valves may be required on outlet structures to prevent backwater from surcharging and flooding the new storm drain improvements.

Permits from outside agencies such as the Oregon Department of State Lands (DSL), the US Army Corps of Engineers (Corps), and the Oregon Department of Environmental Quality (DEQ) may also be required.

E 6.06 MANHOLES

Changes in piping size and grade shall only occur at manholes. In general, storm drains shall be designed to have access for cleaning no further than 450 feet apart. Manhole rims in unimproved areas shall be a minimum of 12 inches above the surrounding ground and be marked with a metal marker post.

A. All connections, junctions, changes of grade, changes in size and alignment shall be made at manholes. Tee connections in storm lines shall not be allowed (with the exception of 4- and 6-inch service laterals). All private connections to the public system shall be reviewed on a case-by-case basis. Private connections to the public system might be allowed using a tee connection under specific conditions.

B. Where the pipe size decreases upstream through the manhole, the upstream pipe crown shall match the elevation of the crown of the downstream pipe. Where grade is limited, matching 0.8 of the pipe diameters may be used.

C. In some extreme locations where flat terrain limits the extension of storm drains, the City Engineer may allow some pipeline configuration changes in conjunction with site filling. Storm drain pipes with depths less than 3 feet, where allowed by the City Engineer, shall be connected from catch basin to catch basin in lieu of the use of manholes.

E 7.00 – SURFACE DRAINAGE

E 7.01 SURFACE DRAINAGE

For purposes of these Engineering Standards, surface drainage routes will be classified according to two general categories: constructed watercourses and natural creeks.

A. Plan requirements for surface drainage courses shall include the requirements previously specified in Section E 2.00 Stormwater Plan and the following supporting data and calculations:

    1. Profile of the channel showing the existing flowline and top of bank, proposed flowline and top of bank, and design water surface profile (backwater curve).

    2. A minimum of three (3) cross sections of the existing channel adjoining or crossing the property taken at the upstream, midsection, and downstream boundaries of the property. More sections may be required depending on the length of the reach and existing channel alignment.

    3. Calculations for arriving at the design flow rate: the City will furnish the flow rate when records are available. Analyze the proposed system and show that the channel cross section after improvement will pass the design storm with one (1) foot of freeboard to the top of bank. For channels shown on the F.I.R.M. maps, show that the channel cross section after improvement will pass the base flood at or below the 100-year flood elevation shown on the F.I.R.M.

    4. Open channels shall have easements sufficient in width to cover the 100-year Floodplain Line when a 100-year design storm is required or 15 feet from the top of the recognized bank, whichever is greater.

E 7.02 CONSTRUCTED WATERCOURSE REQUIREMENTS

A. Constructed watercourses shall be designed with a "natural" curved alignment with a variable side slope not to exceed four to one (4:1), except that in tight spots created by existing natural features (e.g., boulders, large trees, etc.) where the slope can be three to one (3:1) until the natural feature is bypassed or where steeper slopes are needed and do not impair the hydraulic efficiency of the waterway. The watercourse shall include a low flow channel as described below and will be reviewed on a case-by-case basis for approval.

   The bank shall be designed with one (1) foot of freeboard above the design storm with a minimum top of bank width of 6 feet. A larger width shall be provided when required by the City Engineer for maintenance purposes. The backslope of the bank shall not exceed two (2) horizontal to one (1) vertical. The existing ground adjacent to the toe of the bank backslope shall be graded to slope away at 2% to prevent water ponding at the backslope toe.

B. Design shall be curvilinear with a 100-foot minimum radius. Tighter curves may be used if the City Engineer determines that sufficient erosion control has been incorporated into the design to maintain stable bank conditions following development.

C. A low flow channel shall be designed to carry a 2-year design storm or the normal low water flow of a year-round creek, whichever is greater. Low flow channel slopes shall not exceed two to one (2:1) and shall be stabilized to the satisfaction of the City Engineer. In general, bank stabilization will be required in any channel with a design flow velocity in excess of 3 feet per second.

D. Capacity of channels shall be determined by the Manning Formula. The value for "n" shall be 0.033 for maintained grass-lined swales. The value for "n" shall be 0.035 for channels with rock-lined bottoms.

E. Existing ditches approved for the point of discharge for storm drains and culverts shall be provided with rock-lined bottoms and side slopes at the discharge point of storm drain or culvert. The rock shall extend for a minimum distance of 8 feet downstream from the end of the storm drain or culvert.

F. All channel sides and bottoms shall be seeded, sodded, or rock lined immediately following construction. Bank stabilization measures shall be designed and included in the construction plans.

G. Points of discharge from culverts and storm drains into ditches and swales 15% or greater in grade shall be rock lined with boulders with one face a minimum of 24 inches in dimension. Said rock lining shall extend for a distance of 10-feet minimum from the point of culvert or storm drain discharge and shall have a width 3 feet in excess of the diameter of the culvert or storm drain. Special energy dissipators may be substituted for boulders at the discretion of the City Engineer.

E 7.03 NATURAL CREEK REQUIREMENTS

A permit must be obtained from the Division of State Lands and the Department of Fish and Wildlife for all work between the creek banks.

A. Natural creeks shall be preserved and all work in and adjacent to creeks shall incorporate both temporary and permanent erosion control measures to protect disturbed areas from erosion and damage. No alteration will be permitted that reduces the overall creek capacity.

B. Creek channel design and construction practices shall be such that the cumulative incremental effects of creek work considered alone or together with existing or similar projects in the vicinity will not result in substantial damage to existing waterways and surface waters by erosion, siltation or sedimentation, significant changes in water quality, increased downstream water velocity, significant harmful deterioration of groundwater drainage, or significant deterioration of aquatic wildlife habitat as determined by the City Engineer.

C. Creek construction, relocation, and/or reconstruction may be approved if the City Engineer determines that such a proposal will result in an overall benefit to or maintenance of a surface water system of equal quality in terms of water quantity and quality control and the Developer can obtain the appropriate State and Federal permits.

D. Any and all stream work shall be consistent with the floodplain management policies and regulations and as set forth in AMC or any amendments thereto.

E. Any and all stream work shall be consistent with the *Stormwater Management Plan*.

E 8.00 – STORMWATER DETENTION

E 8.01 GENERAL REQUIREMENTS

A. All storm drainage runoff originating from and/or draining to any proposed development shall be controlled and/or conveyed in accordance with all City standards and policies as described in these Engineering Standards. When existing conditions make storm drainage detention impossible for a portion of a site, the City Engineer may permit compensatory storage volume to be provided on another portion of the site, provided the total site area is tributary to one drainage basin both prior to and after development. In no case shall the runoff rate from the total site exceed the allowable release rate.

B. Detention basins will be required to detain post-developed runoff from the 2-year, 5-year, 10-year, and 25-year, twenty-four (24)-hour storm to pre-developed quantities. If the project area is greater than 100 acres or covers multiple drainage sub-basins, then the 50-year, twenty-four (24)-hour storm must also be detained to pre-developed peak volumes. Potential downstream damage due to detention system failure/overflow may require greater detention requirements or improvements downstream. In no case shall the release rates increase the flooding conditions downstream. An emergency overflow must be designed to accommodate 100-year storm flows.

C. The minimum allowable diameter for an orifice in a flow control structure shall be 2 inches due to the possibility of clogging or plugging.

D. Detention requirements may be waived by the City Engineer when discharge will be released directly into the Willamette River. Direct discharge shall not exclude the use of erosion control or other water quality control techniques within the development. Waiver of the detention requirement may also be allowed along a channel that has been fully improved to accommodate the 100-year design storm.

E. Detention facilities shall be open basins or ponds or underground storage (pipe/chamber), or combinations of the above.

F. Stormwater plans shall include a plan and profile of the facilities. The profile requirement for private drainage systems may be waived at the discretion of the City Engineer when sufficient data is provided on the plan in a clear and concise manner including the following minimum hydraulic and physical data: 1) grades, bottom elevations of ditches, channels, ponds and swales, parking lots and recharge trenches; 2) inverts of pipes; 3) inverts and tops of all structures such as manholes, catch basins, chambers, or similar structures; and 4) size, length, and slope of all pipes or other detention or conveyance facilities, including the invert elevations of the existing or any other storm drainage system the subject drainage proposes to discharge into. The design volume of all detention ponds shall also be shown on the plan as well as a note indicating that ponds shall be inspected prior to landscaping.

G. All aspects of the on-site drainage system must be properly designed to handle all flows developed on-site and all flows that flow through the site from upstream. Designers should conceptualize how water will move into, through, and out of the system, looking for such potential problems as flow impediments, construction difficulties, future maintenance problems, and soil erosion potential.

H. All aspects of public health, safety, maintenance, nuisance abatement, and vector control must be carefully reviewed in every drainage control system plan. Protective measures are often necessary and shall be required whenever appropriate. The protective measures themselves shall be designed so as not to constitute hazards or nuisances.

I. The impact of a system failure should be analyzed both in terms of on-site and off-site effects. The impacts may be to adjacent properties, or to elements of the public drainage system or other private systems. The downstream consequences of failure of a detention pond shall be included in determining location and design parameters.

J. The frequency and difficulty of future maintenance can be minimized by thorough consideration during design of what could possibly go wrong in the system and what would be required to correct the problem. Facility design must incorporate maintenance considerations to ease such problems.

K. The use of the site should be evaluated to determine if hazardous materials or other pollutants are likely to be present, and if extraordinary design considerations are necessary.

L. The visual impact and other potential problems (mosquito breeding, smell, etc.) must be minimized. Concerns will vary with the site environment, but aesthetics should always be of concern to the designer.

M. It is important that runoff from rooftops pass through the detention system; the design should clearly indicate how roof runoff moves through the system.

N. Access, passable by a maintenance vehicle, to all control structures by appropriate equipment shall be provided with easements dedicated to the City.

O. All detention facilities shall have emergency overflow structures incorporated into their design. Flow capacity of the overflow shall be calculated and shown as supporting information. The overflow shall accommodate peak flows from a 100-year storm.

E 8.02 SURFACE PONDS

A. Slopes on all interiors of surface ponds shall not exceed four (4)-feet horizontal to one (1)-foot vertical for all detention ponds in PUDs, subdivisions, and land partitions. Ponds in commercial, industrial, and multifamily developments that are to remain under private ownership and maintenance shall have at least one interior slope not exceeding four (4)-feet horizontal to one (1)-foot vertical with all other interiors exceeding four to one (4:1) to be either retaining walls designed by a licensed structural engineer or a design submitted by a licensed engineer experienced in soils mechanics. Slopes on pond exteriors shall not exceed two (2) horizontal to one (1) vertical.

B. All ponds 3-feet deep or less shall have a minimum bottom dimension of 6 feet or as approved by the City Engineer. All ponds over 3-feet deep shall have a minimum bottom dimension of 15 feet. Maximum water depth in all ponds shall be 4 feet.

C. Ponds suited to multiple use are encouraged. Examples of multiple uses are sport courts, play areas, neighborhood parks, and picnic areas. Such ponds that will provide public access shall be designed with special attention to safety of the public during inundation of the pond. Side-slopes shall be very gradual to avoid the risk of someone slipping into the pond and not being able to walk out.

D. All ponds shall be landscaped so as to provide slope stability and pleasant appearance by utilizing sodding, seeding, and planting of trees and shrubbery. Under no circumstances shall use of easily floatable or erodible materials (such as "bark dust") be permitted in pond interiors.

E. Maintenance of surface ponds in commercial, industrial, and multifamily developments shall be the responsibility of the property owner or owner’s association. Maintenance of surface pond landscaping in single-family residential areas and PUD developments shall be the responsibility of an owner's association or community club and shall be so stated on the face of the plat unless

accepted for maintenance by the City. Failure to maintain a weed abatement program will be cause for the City to perform the work and bill the owner or owners.

F. Where berms are to be constructed as banks of detention ponds, they shall be designed by a certified and experienced independent geotechnical engineer. The geotechnical engineer shall stamp the plans for berm construction and certify that the pond and earth berm are safe for the intended use. Notes to the effect of the above shall be shown on the plans submitted for approval.

G. All City-maintained detention pond control structures not abutting a public right-of-way shall be accessible to the City of Albany for maintenance and operation. Access easements shall be provided, which shall be a minimum 15-feet wide and shall be improved to accommodate vehicular traffic year-round. Control structures shall be designed to operate automatically as much as possible.

H. A vehicular access must be provided to the bottom of the detention pond when the bottom width of the pond is 20 feet or greater and/or when the height of the pond interior wall exceeds 5 feet.

I. The access grade into the proposed retention/detention pond shall be no steeper than five (5)-feet horizontal to one (1)-foot vertical.

J. All detention ponds shall have a minimum of one (1)-foot of freeboard above the maximum design water surface.

K. Any embankment for a detention pond in excess of 3 feet in height must be designed by a qualified geotechnical engineer and approved by the Public Works Department. The minimum top width of this berm shall be 15 feet, unless designed by a qualified, licensed engineer and approved by the Public Works Department. The geotechnical engineer, experienced in soils mechanics, shall inspect and certify the construction of any such berm.

L. Any embankment less than 3 feet, including one (1) foot of freeboard, in depth forming one or more sides of a retention/detention pond shall have a minimum 10-foot wide top of berm with a back slope not to exceed two (2) horizontal to one (1) vertical unless otherwise approved by the City Engineer and designed by and with construction being certified by a licensed engineer experienced in soils mechanics.

M. The bottom of all constructed and graded retention/detention ponds shall be sloped no flatter than 0.01 foot/foot (1%) towards the outlets for drainage.

   EXCEPTION: This requirement need not apply to natural ponds, which exist and are utilized for stormwater detention.

N. All detention ponds shall have a well-defined low flow channel to contain runoff of lesser storms. Any low flow channel shall be designed so as to enhance the pond landscaping and overall pond appearance.

O. Outlets of all detention ponds shall be provided with suitable debris barriers designed to protect the outlet from blockage or plugging. Properly-sized overflow structures shall be designed into the pond.

P. The maximum design water depth in all detention ponds shall be 4 feet.

Q. The design volume of the detention pond shall be shown on the plan and the pond volume inspected prior to landscaping (a note to this effect shall be shown on the plans).

E 8.03 CLOSED DETENTION SYSTEM

A. A minimum grade of 0.003 feet per foot shall be used in any pipes or vaults used for closed detention systems.

B. The outfall control structure shall meet the standards set forth in the *Standard Construction Specifications* or as approved by the City Engineer.

C. Access to closed detention systems shall be provided at the upstream and downstream terminus of the system. The maximum distance between access points shall be 400 feet. Improvements shall be made to facilitate maintenance equipment access to the maintenance access points year-round. Maintenance access point shall not be in areas that can be fenced off by private property owners.

E 8.04 DETENTION POND EASEMENTS

A. All detention ponds in platted subdivisions may be required to be located in separate tracts dedicated to the City with access easements for maintenance where required.

B. Where a detention pond is located within the boundaries of a commercial lot and not in a separate dedicated tract, the peak design discharge water surface plain shall be shown as an easement on the final plat hard copy. Restrictions shall be added to the final plat hard copy and appear on the face of the plat.

C. A written restriction shall be added to the final plat hard copy to the affect that approval shall be obtained from the Department of Public Works before any structures, fill, or obstructions (including fences) are located within any drainage easement or delineated 100-year flood plain area.

D. A drainage easement shall be required for all public, closed storm drainage detention systems. The City Engineer may require wider easements where pipe diameter or vault widths exceed 4 feet.

E. All publicly maintained storm drainage systems including collection, conveyance, and flow restrictors not located in right-of-way shall be located in drainage easement or tract dedicated to the City of Albany.

F. Permanent access and drainage easements shall be granted to the City of Albany for any storm drainage detention facility, which is located in a development, and for an access road to that facility where said facility and access road are located on property other than the development but serve the development. Access roads shall provide all-weather access. The owner in fee simple and contract purchaser of the property upon which the access road and facility are to be located shall execute the said easement. The minimum access easement width shall be 15 feet.

E 9.00 – EROSION PREVENTION AND SEDIMENT CONTROL

E 9.01 EROSION PREVENTION AND SEDIMENT CONTROL

Local EPSC requirements are in addition to any state or federal permitting requirements. Title 12 of the Albany Municipal Code defines the City of Albany's Erosion Prevention and Sediment Control program. Erosion prevention and sediment control measures shown on the plans shall comply with the requirements of this program. Albany's Erosion Prevention and Sediment Control Manual can be found on the City's website on the Public Works, Engineering web page.

E 10.00 – APPENDIX

E 10.01 24-HOUR RAINFALL FOR ALBANY

The following list of 24-hour rainfall totals for the given return intervals were determined from the Regional Precipitation for Oregon data, issued January 2008, as provided by George Taylor of Applied Climate Service. The water quality storm was determined from rainfall data obtained between 1948 and 2011 at two nearby rain gauges (Jefferson and Hyslop Experiment station located between Albany and Corvallis). The one (1)-inch water quality storm meets the capture and treatment criteria of 80% of the average annual runoff volume.

TABLE E 10.01-A

Return Interval	Peak 24-Hour Rainfall
Water Quality Storm	1.00 inch
2 year	2.47 inches
5 year	2.86 inches
10 year	3.37 inches
25 year	3.94 inches
50 year	4.38 inches
100 year	4.83 inches

E 10.02-A SHALLOW CONCENTRATED FLOW VELOCITY

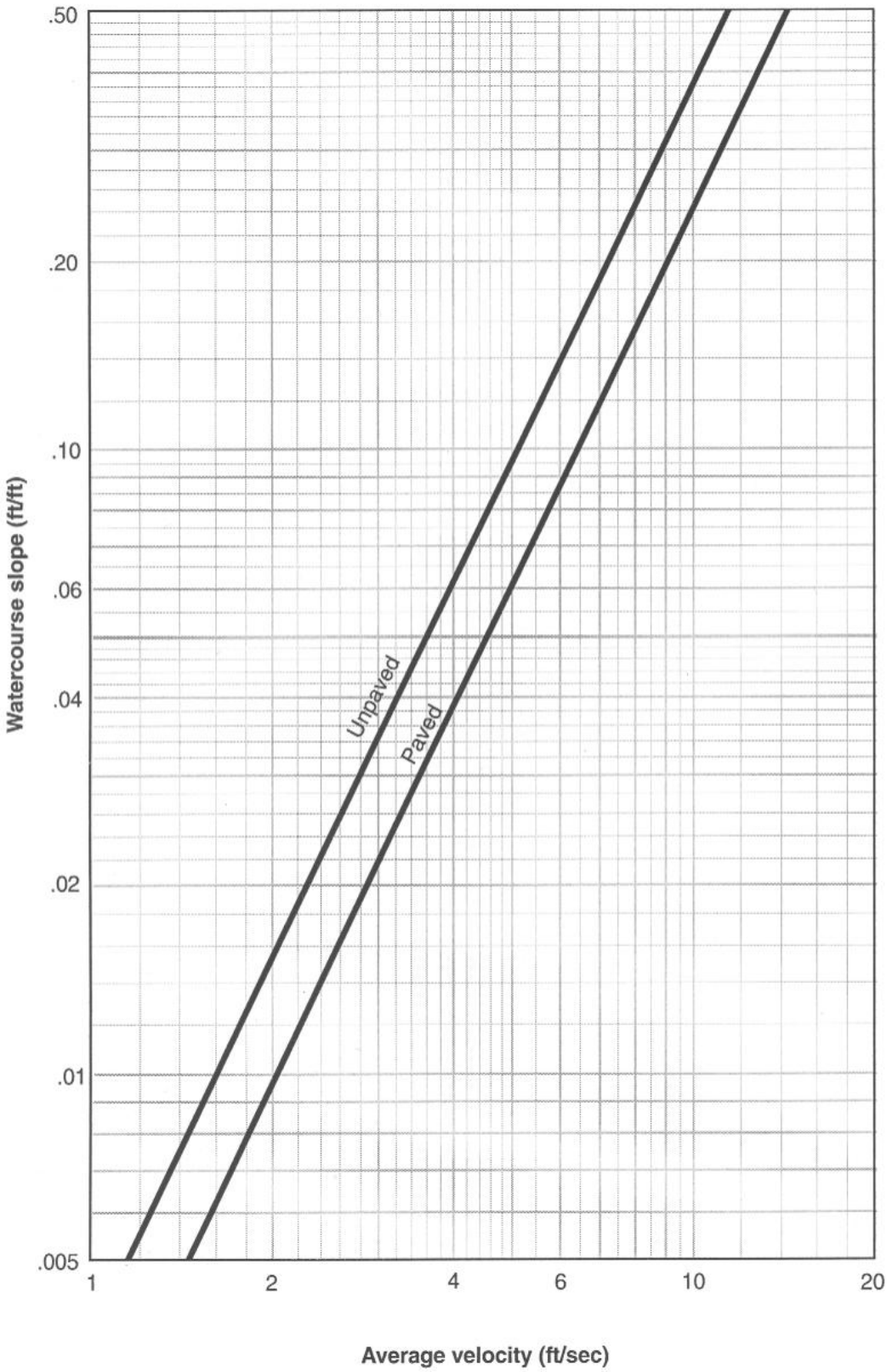

Average velocities for estimating travel time for shallow concentrated flow.

E 10.02-B RAINFALL INTENSITY-DURATION FREQUENCY CURVES

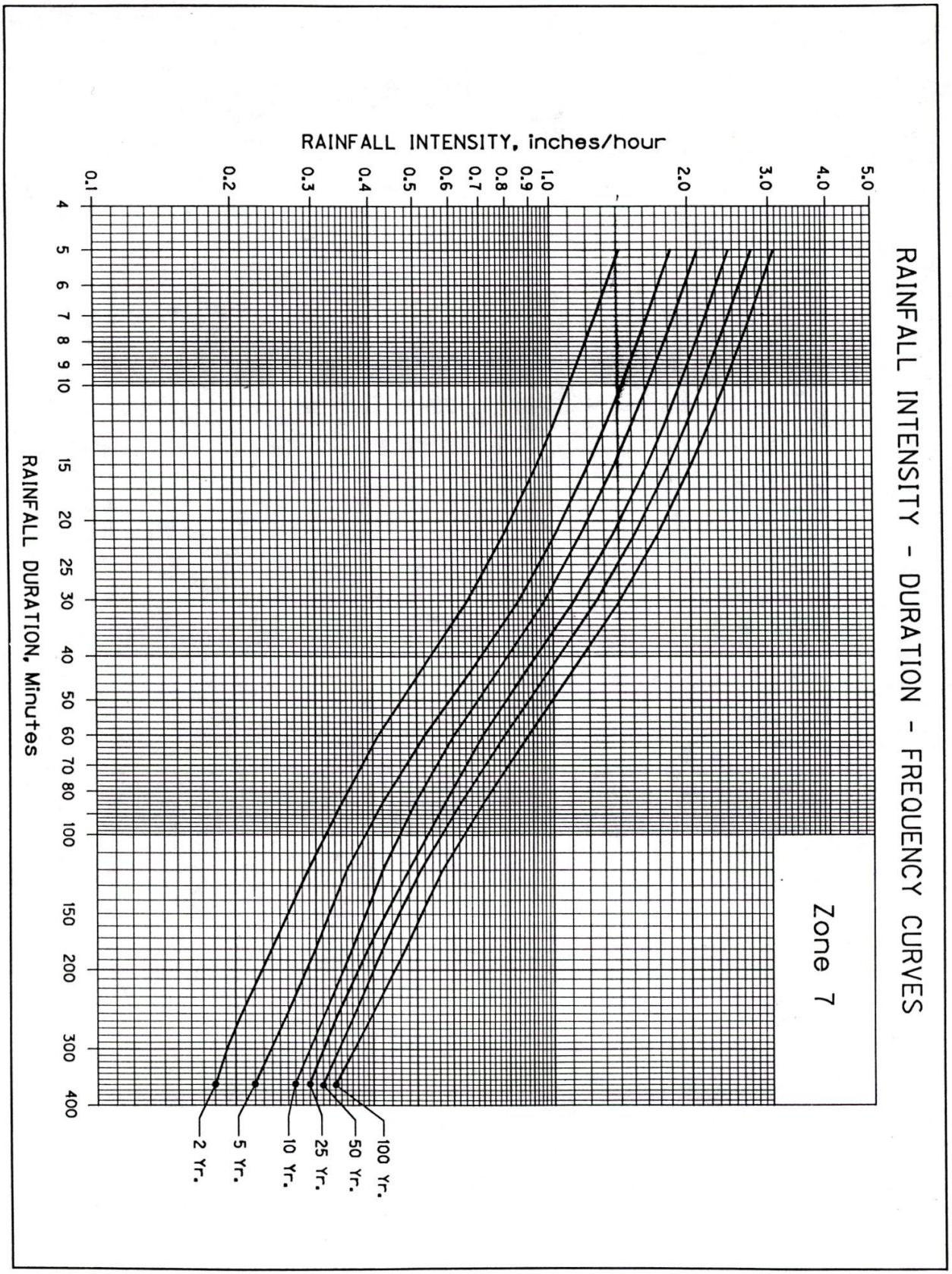

E 10.03 PLANTING MATRIX AND EXAMPLE PLANTING DIAGRAMS

This appendix provides planting matrices with important information on plants approved for installation in Albany's post-construction stormwater quality facilities. All plants included in these matrices are drought tolerant and do not require irrigation after their establishment period. The matrices are intended to guide plant selection for each facility's planting plan. A description of the type of information provided for each plant is provided below.

- **Plant Name:** Plants are listed by their botanical name first, in italics, followed by a generally accepted common name. Note that common names vary, so use of the botanical name is recommended to ensure proper plant selection

- **Zone:** Denotes the planting moisture zone as noted in the facility Figure E 3.05A in which it is appropriate to locate each respective plant. Some plants work in multiple moisture zones, and others only in a particular dry, moist, or wet condition

- **Origin:** Plants approved for stormwater facilities can be grouped into three categories: *NW Natives*, *NW Native Cultivars*, and *Non-Native Adaptive* plants.

  - *NW Native*: These are plants that are indigenous to our specific region. They typically require minimal care once they are planted because they have evolved and adapted to the growing conditions and climate of the region. Because of their place in the local ecology, native plants also provide habitat value for birds and other local species. For these reasons, native plants are strongly recommended for stormwater facilities and should be used whenever suitable.

  - *NW Native Cultivar:* These species are cultivated varieties of native plants produced by horticultural techniques and are not normally found in wild populations. Cultivars are bred for certain desired characteristics that make them different from their native counterparts. Native cultivars may be selected over a native plant if it is more suitable for certain conditions, such as densely urbanized applications. For example Kelsey Dogwood (Cornus sericea 'Kelseyi) is a cultivar of the native Red Twig Dogwood (Cornus sericea). Kelsey Dogwood has been selectively bred to be much smaller at maturity than red twig dogwood, which can be advantageous in small scaled urban stormwater planters. In such instances, the native cultivar is preferred because it will not outgrow the facility or require frequent pruning maintenance, while still offering the same vegetative advantages as its native counterpart.

  - *Non-Native Adaptive*: These plants are not native to our region, but have certain characteristics that make them very useful and well adapted to stormwater facilities. The non-native adapted plants included on the stormwater facility plant lists are plants that have proven to be non-invasive.

- **Type/Size**: A range of factors to aid in plant selection showing individual plant characteristics:

- *(E)vergreen/(D)ecidious:* Identifies the characteristic of a plant to keep foliage during winter months. Planting placement and selection should maintain a balance of evergreen and deciduous materials.

- *Potential Height:* Identifies maximum size at maturity to use as a design guideline.

- *Typical On-Center Spacing:* Identifies the optimum spacing for new plantings. This is to be used as a guideline and may vary slightly depending on site conditions.

- **Context Factors**

- *Sun/ Shade :* When developing planting plans, it is important to consider if plants are going to be in full sun or shade. This column identifies which plants are appropriate for full sun or shade.
- *Facility width:* Narrow conditions require plants that are not too large and will outgrow, or have potential for roots to damage, narrow planters. This column identifies which plants are appropriate for various planter widths.
- *Lined Facility/ On Top of Utilities:* In lined facilities it is important to limit larger material or plants with aggressive and deep roots. This column identifies which plants are appropriate for this application.
- *Parking Areas:* This column identifies plants that are appropriate for facilities in most parking areas. Large shrubs selected for parking areas should have form and habit that are open and transparent. Note: For portions of parking areas that have line of sight requirements, plants should be selected from the "Streets/Line of Sight" column.
- *Streets /Line of Sight:* For street-side facilities and in certain parking areas where line of sight visibility is required, use plant materials that do not limit necessary lines of sight visibility. This column identifies which plants are appropriate for this application. NOTE: See City of Albany's Recommended Street Trees List for trees approved for use in Streetside Post-Construction Stormwater Facilities.
- *Adjacent to Buildings:* When planting adjacent to buildings, limit plant sizes for compatibility with building footings, windows or other systems. This column identifies which plants are appropriate to use adjacent to buildings.
- *In Natural Resource Overlay District:* If the stormwater facility is within the Natural Resource Overlay District, all plants shall be indigenous to our specific region.

TABLE 1: *Stormwater Facility Plant Lists: Planters*													
Plant Name	**Zone**	**Origin**			**Type/Size**			**Context Factors**					
Botanical Name **, Common Name**	Moisture Zone (A) Uniformly Wet to Moist	NW Native	NW Native Cultivar	Non-Native Adapted	(E)vergreen /(D)eciduous	Potential Height	Typical On-Center Spacing	(S)un / (Sh)ade	Facility Width (Mininum)	Lined Facility/ On Top of Utilities	Parking Areas	Streets/ Line of Sight	Adjacent to Buildings
Herbaceous Plants													
Carex densa, Dense sedge	•	•			E	24"	12"	S	N/A	•	•	•	•
Carex morrowii 'Variegata', Variegated Japanese sedge	•			•	E	18"	12"	S	N/A	•	•	•	•
Carex obnupta, Slough sedge	•	•			E	24"	12"	S	N/A	•	•	•	•
Carex rupestris, Curly sedge	•			•	D	14"	12"	S	N/A	•	•	•	•
Carex testacea, New Zealand orange sedge	•			•	E	24"	12"	S	N/A	•	•	•	•
Deschampsia caespitosa, Tufted hair grass	•			•	D	36"	12"	S/Sh	N/A	•	•	•	•
Eleocharis ovata, Ovate spike rush	•	•			D	30"	12"	S	N/A	•	•	•	•
Juncus ensifolius, Dagger-leaf rush	•			•	D	10"	12"	S	N/A	•	•	•	•
Juncus patens 'Elk Blue', Elk Blue gray rush	•		•		E	18"	12"	S/Sh	N/A	•	•	•	•
Small Shrubs													
Cornus sericea 'Kelseyi' , Kelsey dogwood	•		•		D	24"	24"	S	N/A	•	•	•	•
Mahonia repens, Creeping Oregon grape	•	•			E	18"	18"	S/Sh	N/A	•	•	•	•
Polystichum munitum, Sword fern	•	•			E	24"	24"	Sh	N/A	•	•	•	•
Rosa gymnocarpa , Dwarf Wood rose	•	•			D	36"	24"	S/Sh	N/A	•	•	•	•
Spirea densiflora, Subapline spiraea	•			•	D	24"	24"	S/Sh	N/A	•	•	•	•
Spirea japonica 'Goldmound, Goldmound spiraea	•			•	D	24"	18"	S/Sh	N/A	•	•	•	•
Large Shrubs													
Cornus sericea , Red twig dogwood	•	•			D	6'	4'	S/Sh	N/A	•			•
Physocarpus capitatus , Pacific ninebark	•	•			D	6'	36"	S/Sh	N/A	•			•
Rubus spectabilis , Salmonberry	•	•			D	10'	4'	Sh	N/A	•			•
Rosa pisocarpa , Swamp rose	•	•			D	8'	36"	S	N/A	•			•
Salix lucida var. 'Lasiandra', Pacific willow	•		•		D	13'	6'	S	N/A				
Salix purpurea nana , Blue arctic willow	•			•	D	8'	6'	S	N/A		•		
Salix sitchensis , Sitka willow	•	•			D	20'	6'	S	N/A				•
Spirea douglasii , Douglas spiraea	•	•			D	7'	4'	S/Sh	N/A	•			•
Viburnum edule , Highbush cranberry	•	•			D	6'	4'	S/Sh	N/A	•	•		•
Onsite Trees *(No Trees in Lined Facilities)***													
Acer circinatum , Vine maple	•	•			D	15'	8'	N/A	3'	•	•		•
Acer rubrum, Red maple	•			•	D	40'	25'	N/A	6'		•		
Alnus rubra , Red alder	•	•			D	60'	15'	N/A	6'				
Carpinus caroliniana, American Hornbeam	•			•	D	25'	20'	N/A	6'		•		
Crataegus douglasii, Black hawthorn	•	•			D	40'	10'	N/A	6'		•		
Fraxinus latifolia, Oregon ash	•	•			D	30'	20'	N/A	6'		•		
Malus fusca, Pacific crabapple	•	•			D	30'	10'	N/A	6'	•			•
Nyssa sylvatica, Black tupelo	•			•	D	25'	20'	N/A	6'		•		
Salix hookeriana, Hooker's willow	•	•			D	15'	10'	N/A	3'		•		
Thuja plicata 'Hogan', Hogan cedar	•	•			E	40'	20'	N/A	6'				•

** SEE CITY OF ALBANY'S RECOMMENDED STREET TREE LIST FOR TREES APPROVED FOR USE IN STREETSIDE POST-CONSTRUCTION STORMWATER QUALITY FACILITIES.

TABLE 2: *Stormwater Facility Plant Lists: Swales*														
Plant Name	**Zone**		**Origin**			**Type/Size**			**Context Factors**					
Botanical Name **, Common Name**	Moisture Zone (A) Uniformly Wet to Moist	Moisture Zone (B) Drier Transitional Area	NW Native	NW Native Cultivar	Non-Native Adapted	(E)vergreen/(D)eciduous	Potential Height	Typical On-Center Spacing	(S)un / (Sh)ade	Lined Facility/ On Top of Utilities	Parking Areas	Streets/ Line of Sight	Adjacent to Buildings	In Natural Resource Overlay Districts
Herbaceous Plants														
Carex morrowii 'Variegata', Variegated Japanese sedge	•				•	E	18"	12"	S	•	•	•	•	
Carex obnupta, Slough sedge	•		•			E	24"	12"	S	•	•	•	•	•
Carex testacea, New Zealand orange sedge	•				•	E	24"	12"	S	•	•	•	•	
Deschampsia caespitosa, Tufted hair grass	•	•	•			D	36"	12"	S/Sh	•	•	•	•	•
Elymus glaucus, Blue wild rye		•	•			E	24"	12"	S	•	•	•	•	•
Juncus ensifolius, Dagger-leaf rush	•				•	D	10"	12"	S	•	•	•	•	
Juncus patens 'Elk Blue', Elk Blue gray Rush	•	•		•		E	18"	12"	S/Sh	•	•	•	•	
Scirpus microcarpus, Small fruited bulrush	•		•			E	24"	12"	S	•	•	•	•	•
Groundcover														
Arctostaphylos uva-ursi, Kinnickinnick		•	•			E	6"	12"	S	•	•	•	•	•
Fragaria chiloensis, Coastal strawberry		•	•			E	6"	12"	S	•	•	•	•	•
Rubus calycinoides, Creeping Raspberry		•			•	E	6"	18"	S	•	•	•	•	
Small Shrubs														
Cornus sericea 'Kelseyi', Kelsey dogwood	•	•		•		D	24”	24"	S/Sh	•	•	•	•	
Mahonia repens, Creeping Oregon grape	•	•	•			E	18"	18"	S/Sh	•	•	•	•	•
Polystichum munitum, Sword fern	•	•	•			E	24”	24”	Sh	•	•	•	•	•
Rosa gymnocarpa , Dwarf Wood rose	•	•	•			D	36"	24"	S/Sh	•	•	•	•	•
Spirea betulifolia, Birchleaf spiraea	•	•	•			D	24”	24”	S/Sh	•	•	•	•	•
Spirea densiflora, Subapline spiraea	•	•			•	D	24"	24"	S/Sh	•	•	•	•	
Spirea japonica 'Goldmound, Goldmound spiraea	•	•			•	D	24"	18"	S/Sh	•	•	•	•	
Spirea japonica 'Magic Carpet', Magic Carpet spiraea	•	•			•	D	18”	24”	S/Sh	•	•	•	•	
Symphoricarpus alba, Snowberry	•	•	•			D	36”	36”	S/Sh	•	•	•	•	•
Large Shrubs														
Cornus sericea, Red-Twig dogwood	•	•	•			D	6'	4'	S/Sh	•				•
Holodiscus discolor, Western serviceberry	•	•	•			D	6'	4'	S/Sh	•	•			•
Rosa nutkana, Nootka rose	•	•	•			D	8'	4'	S/Sh	•				•
Omleria cerasiformis, Indian plum	•		•			D	6'	4'	S/Sh	•	•			•
Physocarpus capitatus, Pacific ninebark	•		•			D	6'	36”	S/Sh	•				•
Ribes sanguimeum, Red flowering currant	•	•	•			D	8'	4'	S/Sh	•	•		•	•
Salix sitchensis, Sitka willow	•		•			D	20'	6'	S					•
Spirea douglasii, Douglas spiraea	•	•	•			D	7'	4'	S/Sh	•	•		•	•
Onsite Trees *(No Trees in Lined Facilities)***														
Acer circinatum , Vine maple	•	•	•			D	15'	8'	N/A	•	•		•	•
Alnus rubra , Red alder	•	•	•			D	60'	15'	N/A				•	•
Carpinus caroliniana, American Hornbeam	•				•	D	25'	20'	N/A		•			
Cornus nuttalii, Pacific dogwood	•	•	•			D	20'	10'	N/A	•	•		•	•
Fraxinus latifolia, Oregon ash	•		•			D	30'	20'	N/A		•			•
Malus fusca, Pacific crabapple	•		•			D	30'	10'	N/A	•			•	•
Thuja plicata 'Hogan', Hogan cedar	•	•	•			E	40'	20'	N/A		•			•

** SEE CITY OF ALBANY'S RECOMMENDED STREET TREE LIST FOR TREES APPROVED FOR USE IN STREETSIDE POST-CONSTRUCTION STORMWATER QUALITY FACILITIES.

PLANT DIAGRAM AND LEGEND 1

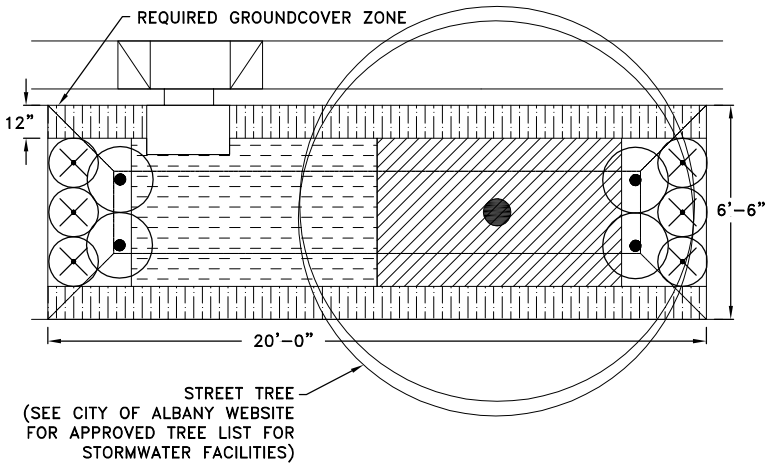

Symbol	Botanical name COMMON NAME	E/D	O.C.	QTY
ZONE A				
	Carex obnupta SLOUGH SEDGE	E	12"	32
	Juncus patens 'Elk Blue' ELK BLUE GRAY RUSH	E	12"	33
	Spirea japonica 'Magic Carpet' MAGIC CARPET SPIRAEA	D	24"	4
ZONE B				
	Fragaria chiloensis COASTAL STRAWBERRY	E	12"	37
	Mahonia repens CREEPING OREGON GRAPE	E	18"	6

PLANT DIAGRAM AND LEGEND 2

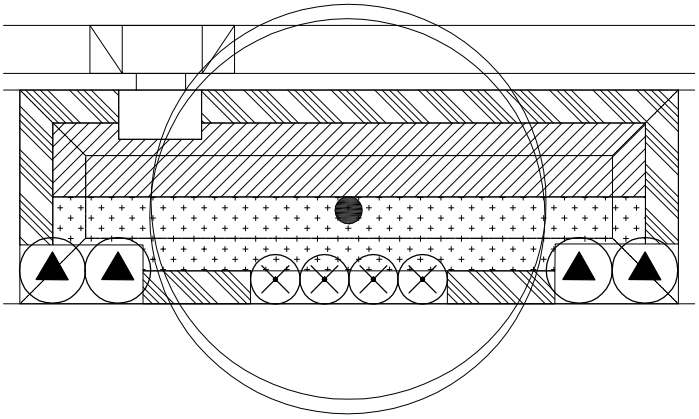

Symbol	Botanical name COMMON NAME	E/D	O.C.	QTY
ZONE A				
	Carex morrowii 'Variegata' VARIEGATED JAPANESE SEDGE	E	12"	36
	Juncus patens 'Elk Blue' ELK BLUE GRAY RUSH	E	12"	39
ZONE B				
	Rubus calycinoides CREEPING RASPBERRY	E	18"	31
	Mahonia repens CREEPING OREGON GRAPE	E	18"	4
	Rosa gymnocarpa DWARF WOOD ROSE	D	24"	4

PLANT DIAGRAM AND LEGEND 3

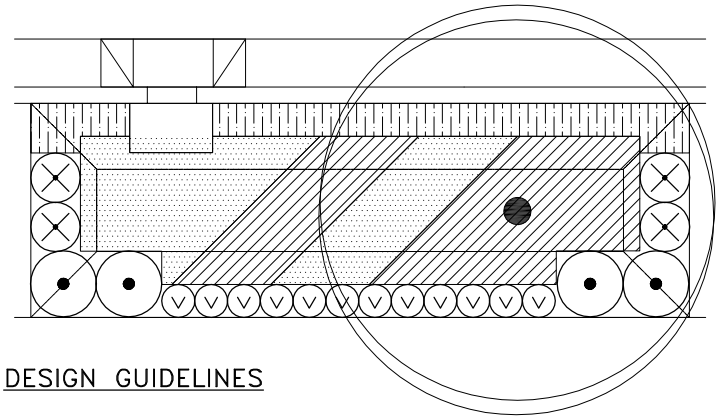

Symbol	Botanical name COMMON NAME	E/D	O.C.	QTY
ZONE A				
	Deschampsia caespitosa TUFTED HAIR GRASS	D	12"	34
	Juncus patens 'Elk Blue' ELK BLUE GRAY RUSH	E	12"	38
ZONE B				
	Fragaria chiloensis COASTAL STRAWBERRY	E	12"	19
	Elymus glaucus BLUE WILD RYE	E	12"	12
	Mahonia repens CREEPING OREGON GRAPE	E	18"	4
	Spirea japonica 'Magic Carpet' MAGIC CARPET SPIRAEA	D	24"	4

DESIGN GUIDELINES

1. These are example planting diagrams approved by the City of Albany. Choose a planting diagram and alter it to your design. Other planting designs may be approved.
2. See Engineering Design Standards text for landscape requirements.
3. See Plant Matrix for typical plant spacing.
4. Planting table required per Engineering Design Standards text. Planting legends shown here do not include all required information for planting tables.

CITY OF ALBANY, OREGON
PUBLIC WORKS DEPARTMENT

SHALLOW SWALE
EXAMPLE PLANTING DIAGRAMS

NO SCALE | JANUARY 2015

PLANT DIAGRAM AND LEGEND 1

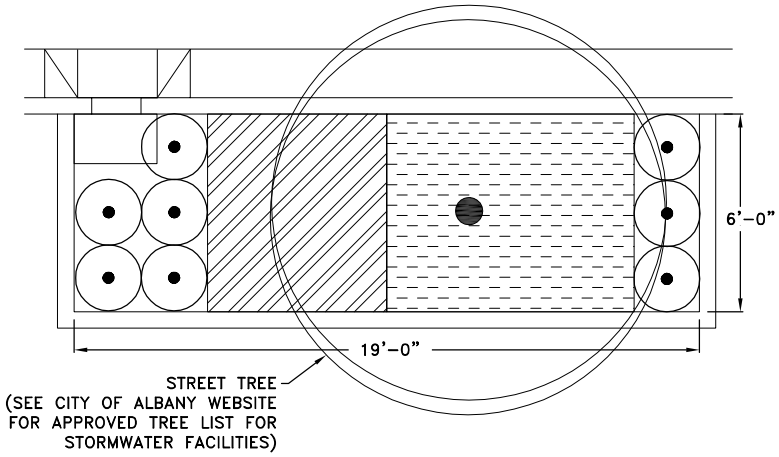

Symbol	Botanical name COMMON NAME	E/D	O.C.	QTY
	Carex obnupta SLOUGH SEDGE	E	12"	45
	Juncus ensifolius DAGGER-LEAF RUSH	D	12"	33
	Cornus sericea 'Kelseyi' KELSEY DOGWOOD	D	24"	8

PLANT DIAGRAM AND LEGEND 2

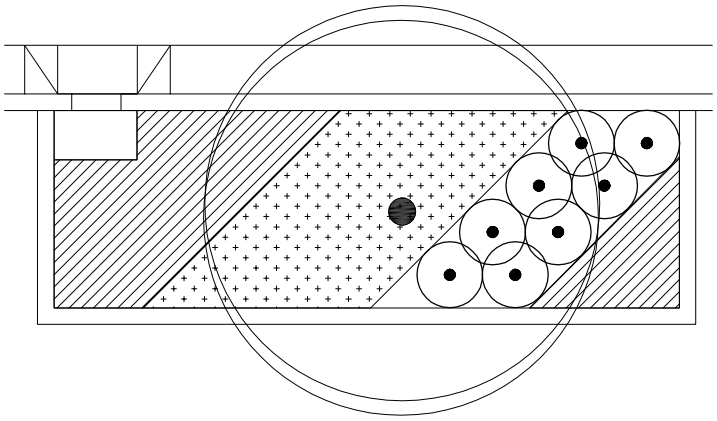

Symbol	Botanical name COMMON NAME	E/D	O.C.	QTY
	Carex morrowii 'Variegata' VARIEGATED JAPANESE SEDGE	E	12"	43
	Juncus patens 'Elk Blue' ELK BLUE GRAY RUSH	D	12"	40
	Cornus sericea 'Kelseyi' KELSEY DOGWOOD	D	24"	8

PLANT DIAGRAM AND LEGEND 3

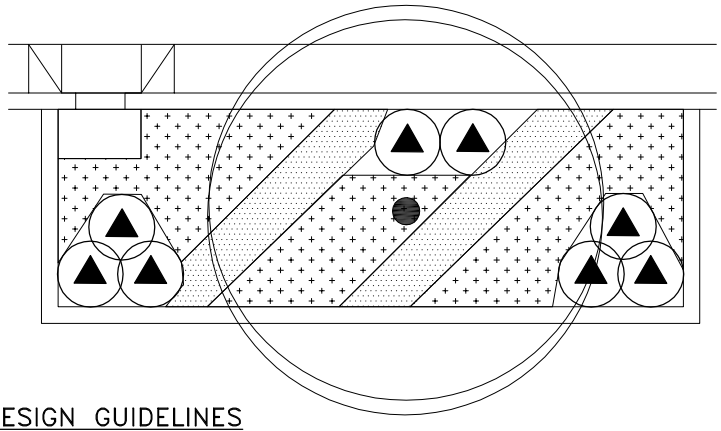

Symbol	Botanical name COMMON NAME	E/D	O.C.	QTY
	Carex morrowii 'Variegata' VARIEGATED JAPANESE SEDGE	E	12"	56
	Deschampsia caespitosa TUFTED HAIR GRASS	D	12"	26
	Rosa gymnocarpa DWARF WOOD ROSE	D	24"	8

DESIGN GUIDELINES

1. These are example planting diagrams approved by the City of Albany. Choose a planting diagram and alter it to your design. Other planting designs may be approved.
2. See Engineering Design Standards text for landscape requirements.
3. See Plant Matrix for typical plant spacing.
4. Planting table required per Engineering Design Standards text. Planting legends shown here do not include all required information for planting tables.

CITY OF ALBANY, OREGON
PUBLIC WORKS DEPARTMENT

6' PLANTER
EXAMPLE PLANTING DIAGRAMS

NO SCALE | JANUARY 2015

PLANT DIAGRAM AND LEGEND 1

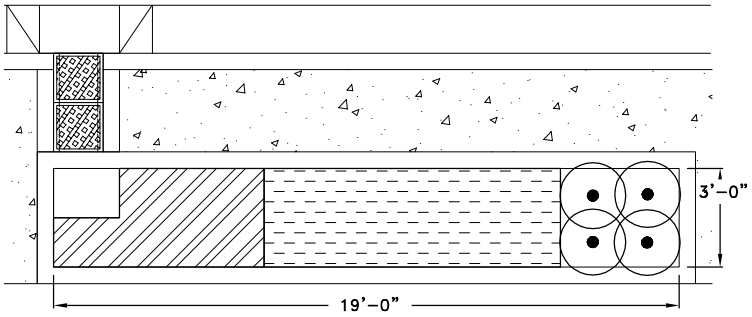

Symbol	Botanical name COMMON NAME	E/D	O.C.	QTY
	Carex obnupta SLOUGH SEDGE	E	12"	27
	Juncus ensifolius DAGGER-LEAF RUSH	D	12"	16
	Cornus sericea 'Kelseyi' KELSEY DOGWOOD	D	24"	4

PLANT DIAGRAM AND LEGEND 2

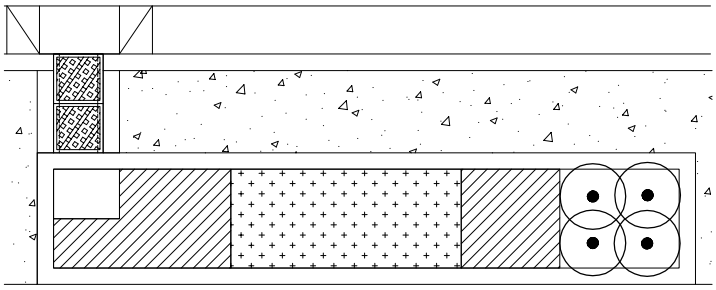

Symbol	Botanical name COMMON NAME	E/D	O.C.	QTY
	Carex morrowii 'Variegata' VARIEGATED JAPANESE SEDGE	E	12"	21
	Juncus patens 'Elk Blue' ELK BLUE GRAY RUSH	E	12"	22
	Cornus sericea 'Kelseyi' KELSEY DOGWOOD	D	24"	4

PLANT DIAGRAM AND LEGEND 3

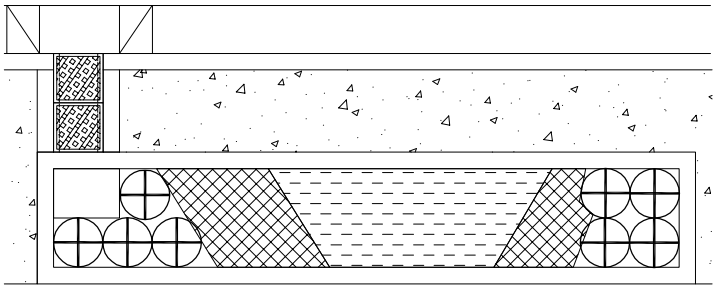

Symbol	Botanical name COMMON NAME	E/D	O.C.	QTY
	Carex obnupta SLOUGH SEDGE	E	12"	20
	Carex testacea NEW ZEALAND ORANGE SEDGE	E	12"	14
	Spirea japonica 'Goldmound' GOLDMOUND SPIRAEA	D	18"	8

DESIGN GUIDELINES

1. These are example planting diagrams approved by the City of Albany. Choose a planting diagram and alter it to your design. Other planting designs may be approved.
2. See Engineering Design Standards text for landscape requirements.
3. See Plant Matrix for typical plant spacing.
4. Planting table required per Engineering Design Standards text. Planting legends shown here do not include all required information for planting tables.

CITY OF ALBANY, OREGON
PUBLIC WORKS DEPARTMENT

PLANTER W/ STEP OUT
EXAMPLE PLANTING DIAGRAMS

NO SCALE | JANUARY 2015

PLANT DIAGRAM AND LEGEND 1

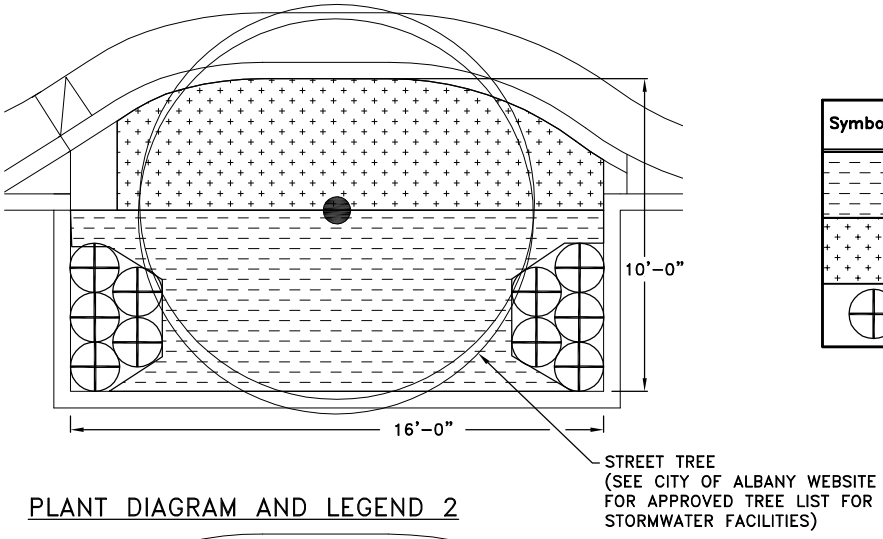

Symbol	Botanical name COMMON NAME	E/D	O.C.	QTY
	Carex obnupta SLOUGH SEDGE	E	12"	68
	Carex morrowii 'Variegata' VARIEGATED JAPANESE SEDGE	D	12"	52
	Spirea japonica 'Goldmound' GOLDMOUND SPIRAEA	D	18"	10

PLANT DIAGRAM AND LEGEND 2

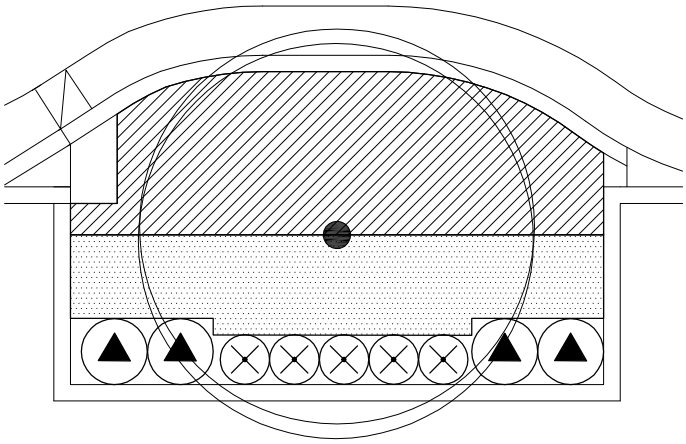

Symbol	Botanical name COMMON NAME	E/D	O.C.	QTY
	Deschampsia caespitosa TUFTED HAIR GRASS	D	12"	47
	Juncus patens 'Elk Blue' ELK BLUE GRAY RUSH	E	12"	68
	Mahonia repens CREEPING OREGON GRAPE	E	18"	5
	Rosa gymnocarpa DWARF WOOD ROSE	D	24"	4

PLANT DIAGRAM AND LEGEND 3

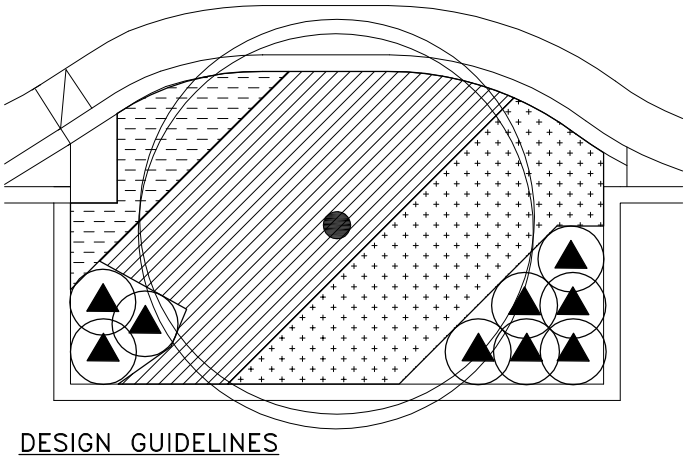

Symbol	Botanical name COMMON NAME	E/D	O.C.	QTY
	Carex obnupta SLOUGH SEDGE	E	12"	15
	Carex morrowii 'Variegata' VARIEGATED JAPANESE SEDGE	E	12"	41
	Juncus patens 'Elk Blue' ELK BLUE GRAY RUSH	E	12"	59
	Rosa gymnocarpa DWARF WOOD ROSE	D	24"	9

DESIGN GUIDELINES

1. These are example planting diagrams approved by the City of Albany. Choose a planting diagram and alter it to your design. Other planting designs may be approved.
2. See Engineering Design Standards text for landscape requirements.
3. See Plant Matrix for typical plant spacing.
4. Planting table required per Engineering Design Standards text. Planting legends shown here do not include all required information for planting tables.

CITY OF ALBANY, OREGON
PUBLIC WORKS DEPARTMENT

MIDBLOCK CURB EXTENSION
EXAMPLE PLANTING DIAGRAMS

NO SCALE | JANUARY 2015

PLANT DIAGRAM AND LEGEND 1

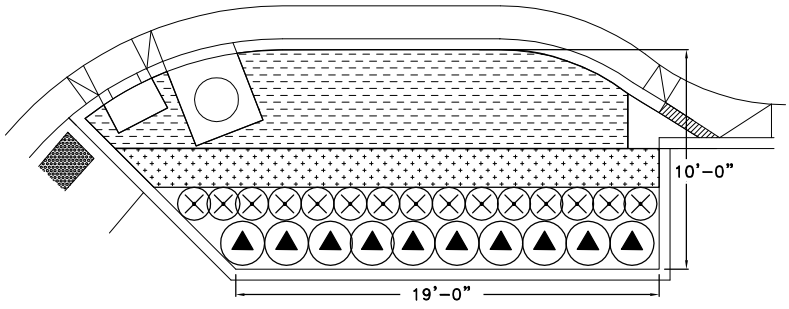

Symbol	Botanical name COMMON NAME	E/D	O.C.	QTY
	Carex obnupta SLOUGH SEDGE	E	12"	82
	Carex morrowii 'Variegata' VARIEGATED JAPANESE SEDGE	E	12"	42
⊗	Mahonia repens CREEPING OREGON GRAPE	E	18"	15
▲	Rosa gymnocarpa DWARF WOOD ROSE	D	24"	10

PLANT DIAGRAM AND LEGEND 2

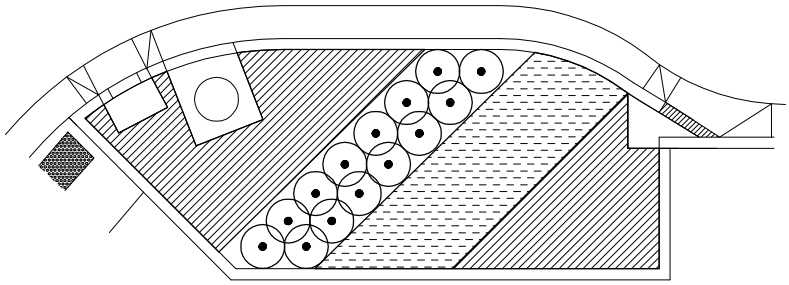

Symbol	Botanical name COMMON NAME	E/D	O.C.	QTY
	Carex obnupta SLOUGH SEDGE	E	12"	56
	Juncus patens 'Elk Blue' ELK BLUE GRAY RUSH	E	12"	96
•	Cornus sericea 'Kelseyi' KELSEY DOGWOOD	D	24"	14

PLANT DIAGRAM AND LEGEND 3

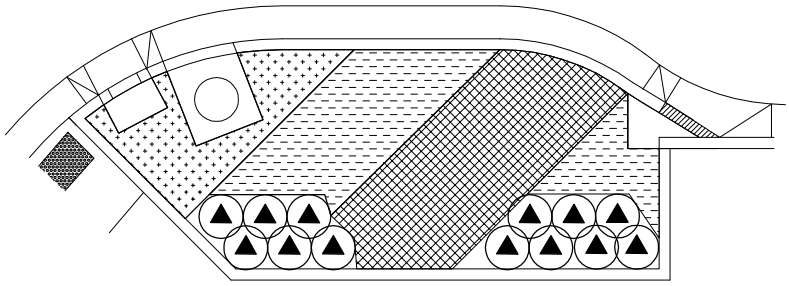

Symbol	Botanical name COMMON NAME	E/D	O.C.	QTY
	Carex obnupta SLOUGH SEDGE	E	12"	58
	Carex morrowii 'Variegata' VARIEGATED JAPANESE SEDGE	E	12"	30
	Carex testacea NEW ZEALAND ORANGE SEDGE	E	12"	68
▲	Rosa gymnocarpa DWARF WOOD ROSE	D	24"	13

DESIGN GUIDELINES

1. These are example planting diagrams approved by the City of Albany. Choose a planting diagram and alter it to your design. Other planting designs may be approved.
2. See Engineering Design Standards text for landscape requirements.
3. See Plant Matrix for typical plant spacing.
4. Planting table required per Engineering Design Standards text. Planting legends shown here do not include all required information for planting tables.

CITY OF ALBANY, OREGON
PUBLIC WORKS DEPARTMENT

INTERSECTION CURB EXTENSION
EXAMPLE PLANTING DIAGRAMS

NO SCALE | JANUARY 2015

APPENDIX E.10.04

OPERATION & MAINTENANCE AGREEMENT AND CHECKLISTS

CITY OF ALBANY
PRIVATE STORMWATER FACILITIES OPERATIONS AND MAINTENANCE AGREEMENT

This Agreement is made and entered into this _____ day of _____ 20___, by and between City of Albany (City) and _____ (Owner).

RECITALS
A. Owner has developed or will develop the private stormwater facilities (Facilities) listed below and shown on attached, and/or referenced, as-built construction drawings in order to satisfy the requirements of Chapter 12.45 of the Albany Municipal Code:

_____

B. The Facilities enable development of property while mitigating the impacts of additional surface water and pollutants associated with stormwater runoff prior to discharge from the property to the public stormwater system or waters of the state. The consideration for this Agreement is connection to the public stormwater system or waters of the state.

C. The property benefited by the Facilities and subject to the obligation of this Agreement is described with the legal description below or in Exhibit A (Property) attached hereto and incorporated by reference.

D. The Facilities have been designed by a registered design professional and constructed to accommodate the anticipated volume of runoff and to detain and treat runoff in accordance with Albany's Municipal Code, Development Code, Engineering standards, and Standard Construction Specifications, as applicable.

E. For the Facilities to function properly over time they must be maintained in accordance with the attached Operations and Maintenance (O & M) Plan.

F. The O & M Plan represents current best management practices for operation and maintenance activities. It is acknowledged that best management practices for O & M activities may change over time.

G. Even with routine maintenance conducted through the O & M Plan, over time, there is potential for the Facilities to lose treatment capacity through extended filtration and absorption of pollutants.

H. Failure to inspect and maintain the Facilities can result in an unacceptable impact to the public stormwater system and/or waters of the state.

NOW, THEREFORE, it is agreed by and between the parties as follows:

1. INCORPORATION OF RECITALS The recitals above are acknowledged and agreed to by all parties.

2. CONSIDERATION Owner undertakes the obligations set forth herein in consideration of development approval granted by the City of Albany and acknowledges that said consideration is adequate to support these obligations.

3. PARTIES The terms of this agreement apply to the named parties, their agents, contractors, successors, and assigns.

4. O & M PLAN As best management practices for O & M activities change over time the owner will be bound to the most current standard operation and maintenance requirements set forth in the most current version of the City's Engineering Standards or like requirements. It is the City's responsibility to notify the owner of any required modifications to current practices.

5. TERM Owners obligations hereunder are perpetual and may only be modified or eliminated by amendment as described herein.

6. OWNER INSPECTIONS Owner agrees to operate, inspect and maintain each Facility in accordance with design parameters and the O&M Plan, attached hereto as Exhibit B and incorporated by reference. Owner shall retain a copy of this agreement, the O & M plan, and applicable as-built drawings on site. The owner shall also maintain a log of all inspection activities on site. The agreements, O & M plan, as-builts, and maintenance log shall be available to the City upon request or during City inspections.

7. OWNER NOTICE OF FACILITY FAILURE Owner shall provide notice to the City if Facilities fail to function as designed. Notice shall be provided within ten (10) days of identifying the failure. Additionally, Owner shall provide immediate notice to the City of any potentially damaging discharge or spill to the Facilities, public storm drain system, or water of the state.

8. DEFICIENCIES All aspects in which the Facilities fail to satisfy the O&M Plan, and/or provide the level of treatment intended with their design, shall be noted as "Deficiencies".

9. OWNER CORRECTIONS All Deficiencies shall be corrected at Owner's expense within thirty (30) days after completion of the inspection. In addition to the maintenance practices identified in the O & M Plan, corrections may include replacement of treatment soil, vegetation, drain rock, and/or other system components as applicable if the City determines that the Facility no longer provides the designed level of treatment. If more than 30 days is reasonably needed to correct a Deficiency, Owner shall have a reasonable period to correct the Deficiency so long as the correction is commenced within the 30-day period and is diligently prosecuted to completion.

10. CITY INSPECTIONS Owner grants City right of entry to inspect the Facilities. City will endeavor to give ten (10) days prior notice to Owner, except that no notice shall be required in case of an emergency. Inspections are not limited to the activities identified in the O & M plan and may include testing as necessary to determine if the Facilities are retaining their designed treatment capacity. City shall determine whether Deficiencies need to be corrected. Owner will be notified in writing of the Deficiencies and shall make corrections within 30 days of the date of the notice.

11. RIGHT OF ENTRY Owner herby authorizes and consents to the exercise of all entry authority granted to the City pursuant to AMC 12.45.150 as it now exists, or may hereafter be amended, to permit inspections and testing of the private post-construction stormwater quality facilities. The same rights of entry shall apply to City Corrections.

12. CITY CORRECTIONS If correction of all Owner or City identified Deficiencies is not completed within thirty (30) days after Owner's inspection or City notice, City shall have the right to have any Deficiencies corrected. City shall have access to the Facilities for the purpose of correcting such Deficiencies. Owner shall pay all costs reasonably incurred by City for work performed to correct the Deficiencies (City Correction Costs) following Owner's failure to correct any Deficiencies in the Facilities. Owner shall pay City the City Correction Costs within thirty (30) days of the date of the invoice. Owner understands and agrees that upon non-payment, City Correction Costs shall be secured by a lien on the Property for the City Correction Cost plus interest and penalties which lien, shall take priority over all other liens and encumbrances to the maximum extent permitted by law. City Correction Costs are defined as all City expenses incurred in taking the corrective actions authorized herein. These costs include, but are not limited to, all amounts paid, or to be paid, to third party contractors as well as all direct and indirect City costs including, but not limited to, labor, benefits, equipment, engineering, administrative, and legal costs. Costs will be determined using the City's current cost accounting methodology.

13. EMERGENCY MEASURES If at any time City reasonably determines that the Facilities create any imminent threat to public health, safety or welfare, City is hereby granted immediate right of access and may immediately and without prior notice to Owner take measures reasonably designed to remedy the threat. City shall provide notice of the threat and the measures taken to Owner as soon as reasonably practicable, and charge Owner for the cost of these corrective measures.

14. COVENANT RUNNING WITH THE LAND The terms of this agreement shall be recorded with the appropriate records department of the County in which the property is located and shall be a covenant running with the land and binding on all owners of the Property present and future, and their heirs, successors and assigns. Owner shall notify City of any change in property ownership and/or change in the owner representative designated to receive notices in Section 21 below.

15. AMENDMENTS The terms of this Agreement may be amended only by mutual agreement of the parties. Any amendments shall be in writing, shall refer specifically to this Agreement, and shall be valid only when executed by the owners of the Property, City and recorded in the Official Records of the county where the Property is located.

16. REMEDIES CUMULATIVE Remedies provided herein for breach of this agreement are cumulative and in addition to any and all other civil and criminal remedies.

17. VENUE AND ATTORNEY FEES Any litigation concerning this Agreement shall be brought in the Circuit Court of the State of Oregon for Linn County and the prevailing party shall be entitled to recover all costs, including reasonable attorney's fees as may be determined by the court, including those on appeal.

18. SEVERABILITY The invalidity of any section, clause, sentence, or provision of this Agreement shall not affect the validity of any other part of this Agreement, which can be given effect without such invalid part or parts.

19. AMBIGUITIES Ambiguities in this agreement, if any, shall not be resolved against the drafter.

20. COMPLETE INTEGRATION This Agreement is a complete integration of all of the parties' understandings and expectations of the other with regard to the subject of this Agreement. Prior discussions or representations which are not included in this Agreement are of no effect.

21. NOTICES Any notice required or permitted under this Agreement shall be given when actually delivered within three (3) business days following deposit in the United States Mail, certified mail, and addressed as follows:

A. To the Owner: _____
_____
_____

B. To the City: City of Albany, Public Works Department
Attn: Public Works Director
P.O. Box 490
Albany, OR 97321

IN WITNESS WHEREOF, Owner has signed this Agreement.

OWNER

Signature:_____

Name:_____

Title:_____

Address:_____

NOTARIZE DOCUMENT BELOW
[Use this notary block if Owner is an individual.]

STATE OF _____
County of _____
This instrument was acknowledged before me this
_____day of _____, 20___,
By

_____
Notary Public
.
(Use this notary block if Owner is an entity.)
STATE OF _____
County of _____
This instrument was acknowledged before me on
_____(date)
by_____(name of person)
as _____ (title)
of _____(name of entity).

_____
Notary Public

CITY OF ALBANY

_____
Public Works Director, or designee Date

Planter/Curb Extension/Swale – Operation & Maintenance Checklist

These vegetated post-construction stormwater quality facilities are designed to accept stormwater runoff from adjacent impervious surfaces. They remove pollutants by filtering runoff through vegetation and soil media. Water should drain through the facility within 24 hours after a storm event. This checklist describes required and recommended inspection and maintenance activities to provide for proper facility function.

Inspection Timing	Facility Feature	Problem	Conditions to Check For	Maintenance Practices
Required: Annually *Recommended: Monthly from November through April*	General	Sediment Accumulation in Treatment Area	Sediment depth exceeds 2 inches	Remove sediment from vegetated treatment area. Rake to ensure facility is level across bottom and water drains freely through soil media. Replace soil media or vegetation as needed
Required: Annually *Recommended: Monthly from November through April*	General	Erosion Scouring	Eroded or scoured facility bottom due to flow channelization, or higher flows	Repair ruts or bare areas by filling with facility soil media; repair or add splash blocks or rock energy dissipaters at curb and pipe inlets; regrade and replant large bare areas; use erosion control measures as needed
Required: Annually *Recommended: Monthly from November through April and after any large storm (1-inch in 24 hours)*	General	Standing Water	Standing water in the facility between storms that does not drain freely; no standing water should exist within 24 hours after any large storm (1-inch in 24 hours or larger)	Remove sediment or trash blockages and rake soil to clear of debris; remove sediment from clean-outs and clear perforated underdrains as needed
Required: Annually *Recommended: Monthly*	General	Rodents	Evidence of rodents or water piping through facility via rodent holes	Repair facility, fill rodent holes, and remove rodents
Required: Annually *Recommended: Monthly during growing season*	General	Insects	Insects such as wasps and hornets interfere with maintenance activities	Remove harmful insects and insect nests as needed
Required: Annually *Recommended: Monthly and after any large storm (1-inch in 24 hours)*	General	Trash and Debris	Visual evidence of trash, debris or dumping	Remove trash and debris from facility

Planter/Curb Extension/Swale – Operation & Maintenance Checklist (continued)

Inspection Timing	Facility Feature	Problem	Conditions to Check For	Maintenance Practices
Required: Annually *Recommended: Monthly from November through April*	General	Contamination and Pollution	Any evidence of spills or excess oil, gasoline, contaminants, or other pollutants;	Remove/cleanup contaminants. Coordinate removal/cleanup with City of Albany Public Works
Required: Annually *Recommended: Annually and after any large storm (1-inch in 24 hours)*	General	Facility malfunction; lack of drainage even after maintenance for sediment or standing water	Facility is not receiving flow and/or draining properly; structural malfunction or broken, misaligned or missing parts have created a safety, drainage, and/or other design problem	Repair or replace entire facility or broken/non-functioning elements to meet design standards and plans
Required: Annually *Recommended: Monthly and after any large storm (1-inch in 24 hours)*	Inlets/Outlets	Obstructed or non-working Inlet/Outlet	Inlet/outlet areas clogged with sediment, vegetation or debris; sediment trap, if present, is ½ or more full; overflow or clean-out pipes are damaged or parts are missing	Remove material to clear inlet and outlet areas, inflow pipes or downspouts, and sediment traps. Clear perforated drain pipe as needed. Repair or replace drain pipe, cap, grate structure or other elements as needed
Required: Annually *Recommended: Monthly from November through June*	Inlets/Outlets	Vegetation blockages	Vegetation blocking more than 10% of the inlet or outlet opening	Trim or remove excess vegetation and soil. No vegetation should block flow at inlets/outlets or overflows. If removing excess vegetation, protect area from erosion.
Required: Annually *Recommended: Monthly and after any large storm (1-inch in 24 hours)*	Check Dams	Erosion, Scouring, Flow Undermining	Scoured flow paths around sides or from underneath check dams; wood rot or holes; check dam is properly attached, aligned and secure; ballast rock on downstream side is in place	Repair ruts and scour areas with compost or facility soil media; Replace ballast rock; Repair or replace check dam as needed
Required: Annually *Recommended: Monthly*	Vegetation	Dead or Stressed Vegetation and/or Poor Vegetation Coverage	Vegetation is dead, stressed, sparse, bare or soil eroded in more than 10% of the facility	Determine cause of poor growth and correct the condition; replant with containerized plants as needed to meet design density standards
Required: Annually *Recommended: Monthly during growing season*	Vegetation	Invasive Vegetation and weeds	Nuisance weeds present. Invasive vegetation is present, including but not limited to the following: Himalayan Blackberry; Reed Canary Grass; Teasel English Ivy; Nightshade; Clematis; Cattail Thistle; Scotch Broom	Remove excessive weeds and invasive vegetation

Planter/Curb Extension/Swale – Operation & Maintenance Checklist (continued)

Inspection Timing	Facility Feature	Problem	Conditions to Check For	Maintenance Practices
Required: Annually *Recommended: Monthly during growing season*	Vegetation	Excessive Shading	Vegetation growth is poor because sunlight does not reach facility	Remove brushy vegetation as needed; re-plant with shade tolerant plants from City facility plant lists as needed
Required: Annually *Recommended: Monthly from November through April*	Liner (If Applicable)	Exposed or Damaged Liner, Leaks from Lined Facility	Liner is visible; more than three 1/4-inch holes in liner	Repair or replace liner and restore cover material
Required: Annually *Recommended: Annually*	Signage	No Parking signs or paint striping is not present or visually clear (only where required on project plans)	Signs are missing, bent or vandalized. Paint striping on street-side curb is faded or missing	Repair/replace signs and re-paint striping as needed

****No chemical control measures such as herbicides, insecticides, pesticides, fertilizers and rodenticides shall be used in post-construction stormwater quality facilities without prior approval from the City of Albany.**

Pervious Pavement – Operation & Maintenance Checklist

These facilities are impervious area reduction measures designed with a porous surface and an underlying stone layer that temporarily stores rainwater that percolates through the surface before infiltrating into the subsoil or being collected in underlying drain pipes and being discharged to the stormwater system. This checklist describes required and recommended inspection and maintenance activities to provide for proper facility function. For manufactured paver systems, the manufacturer's maintenance recommendations shall also be followed.

Inspection Timing	Facility Feature	Problem	Conditions to Check For	Maintenance Practices
Required: Bi-annually *Recommended: Twice per year and after large storms (1-inch in 24 hours)*	Pavement Surface	Sediment and debris deposits, potentially reducing infiltration capacity	Sediment and debris deposits across surface	Sweep with regenerative air sweeper at least twice per year as a preventive measure against clogging
Required: Annually *Recommended: Monthly for areas near landscaping, adjacent to impervious areas, or in pathways of dirty vehicles*	Pavement Surface	Sediment and debris deposits, water infiltrates unevenly across surface or ponds in low areas	Clogged surface, water ponding, and/or water infiltrating unevenly across surface	Concrete or asphalt pervious pavement: Power wash; paver systems: unclog with vacuum sweeper truck or method per manufacturer's recommendations do not use surfactants; use inlet protection measures to collect debris and filter power wash runoff
Required: Annually *Recommended: Annually*	Structural components	Cracked or moving edge constraints; cracked or settled pavement	Cracked or moving edge constraints, or cracked or settled pavement that affects overall performance	Repair all cracks, settlement or other defects that affect performance of facility per design professional's or manufacturers' specifications
Required: Annually during fall *Recommended: Monthly during the Fall*	General	Leaf litter deposition on surface	Leaf litter that could affect stormwater infiltration through pavement	Sweep leaf litter and sediment to prevent surface clogging and ponding
Required: Annually *Recommended: Monthly during growing season*	Vegetation	Weeds	Weeds that cover 10% of the surface area	Remove weeds by hand, power washing, or other approved method; use inlet protection measures if power washing.
Required: Annually *Recommended: Annually and after power washing, vacuum sweeping, and weeding)*	Filter medium between pavers	Aggregate loss in pavers	Settling of pavers or lack of aggregate around pavers	Reset pavers and replace pore space with aggregate from original design

****No chemical control measures such as herbicides, insecticides, pesticides, fertilizers and rodenticides shall be used in post-construction stormwater quality facilities without prior approval from the City of Albany.**

Green Roof Operation & Maintenance Checklist

These facilities are impervious area reduction measures and are lined and vegetated rooftop systems designed to intercept rainfall and reduce runoff - with excess flows directed to downspout drains. This checklist describes required and recommended inspection and maintenance activities to provide for proper facility function. System suppliers and manufacturer's recommendations shall also be followed for proper maintenance.

Inspection Timing	Facility Feature	Problem	Conditions to Check For	Maintenance Practices
Required: Two times per year *Recommended: Monthly Nov - April and after large storms (1-inch in 24 hours).*	Green Roof structural components	Standing water, super saturated soil	Clogged drain or compacted soil	Clear drains; remove organics and other debris from drain; loosen compacted soil and amend
Required: Annually *Recommended: Annually and after large storms (1-inch in 24 hours).*	Structural components	Leaks in roof	Tears or perforation of membrane	Repair immediately. Contact manufacturer for repair or replacement
Required: Annually *Recommended: During Fall and Spring.*	Vegetation	Dead or stressed vegetation	Healthy vegetation should cover 90% of facility	Replant per original planting plan; irrigate as needed
Required: Annually *Recommended: During Fall and Spring.*	Vegetation	Dry grass or plants that may present a fire hazard	Overgrown areas, dry grasses, dead branches and leaves	Prune grass and plantings; remove clippings & debris
Required: Quarterly *Recommended: Monthly during growing season*	Vegetation	Weeds	Weeds on more than 20% of the site	Remove weeds manually
Required: Annually *Recommended: Monthly*	Growing medium	Exposed soil	Vegetation should cover 90% of facility	Cover exposed soil with plants and mulch consistent with original design
Required: Annually *Recommended: Monthly from Nov - April and after large storms (1-inch in 24 hours).*	Growing medium	Erosion	Rill or gully formation	Fill eroded areas with approved soil and lightly compact and replant consistent with original design

****No chemical control measures such as herbicides, insecticides, pesticides, fertilizers and rodenticides shall be used in post-construction stormwater quality facilities without prior approval from the City of Albany.**

Water Quality Manhole – Operation & Maintenance Checklist

These facilities provide pre-treatment by settling sediment and large debris. This checklist describes required and recommended inspection and maintenance activities to provide for proper facility function.

Inspection Timing	Facility Feature	Problem	Conditions to Check For	Maintenance Practices
Required: Annually *Recommended: Monthly from November through April*	General	Trash, Debris and Sediment	Material exceeds 50% of sump depth or one foot below the Tee or Snout	Remove trash, debris, and sediment
Required: Annually *Recommended: Annually*	General	Structural Damage	Tee or Snout is not securely attached to manhole wall	Securely attach snout or tee to wall and outlet pipe
Required: Annually *Recommended: Annually*	General	Structural Damage	Structure is not upright (allow up to 10% from plumb)	Ensure structure is in correct position
Required: Annually *Recommended: Annually*	General	Structural Damage	Connections to outlet pipe are not watertight	Repair or replace structure to work as designed.
Required: Annually *Recommended: Annually*	General	Structural Damage	Any holes in the structure(other than designed)	Repair/replace structure as needed so no holes exist, except as designed
Required: Annually *Recommended: Annually*	Manhole	Locking Mechanism Not Working	Mechanism cannot be opened by one maintenance person with proper tools; bolts into frame have less than 1/2 inch of thread (may not apply to self-locking lids)	Replace/repair as necessary to ensure mechanism opens appropriately
Required: Annually *Recommended: Annually*	Manhole	Cover Not in Place	Cover is missing or only partially in place	Replace cover and/or secure cover in place
Required: Annually *Recommended: Annually*	Manhole	Cover Difficult to Remove	One maintenance person cannot remove lid using normal lifting pressure; cover makes access for maintenance difficult	Ensure cover can be removed by one maintenance person
Required: Annually *Recommended: Annually*	Manhole	Ladder Rungs Unsafe	Ladder is unsafe (missing rungs, loose rungs, misalignment, rust, cracks)	Repair or secure ladder immediately. Ladder must meet design standards and allow safe access for maintenance

****WATER QUALITY MANHOLES ARE CONSIDERED CONFINED SPACES AND ARE NOT DESIGNED FOR PROLONGED OCCUPANCY. FOLLOW INDUSTRY SAFETY STANDARDS WHEN MAINTAINING FACILITIES.**

APPENDIX E 10.05

DESIGN GUIDE DRAWINGS

DESIGN GUIDE DRAWINGS

PRIVATE POST-CONSTRUCTION STORMWATER QUALITY FACILITIES

ONSITE SWALE

ONSITE PLANTER

ONSITE PLANTER (BUILDING PLANTER)

PERVIOUS PAVEMENT

NOTE: THESE DRAWINGS PROVIDE GUIDANCE FOR DESIGNING PRIVATE POST-CONSTRUCTION STORMWATER QUALITY FACILITIES LOCATED OUTSIDE THE RIGHT-OF-WAY ON PRIVATE PROPERTY. THE ENGINEERING STANDARDS AND STANDARD CONSTRUCTION SPECIFICATIONS FOR PUBLIC FACILITIES WILL ALSO BE USED AS A BASIS FOR THE DESIGN AND REVIEW OF PRIVATE FACILITIES.

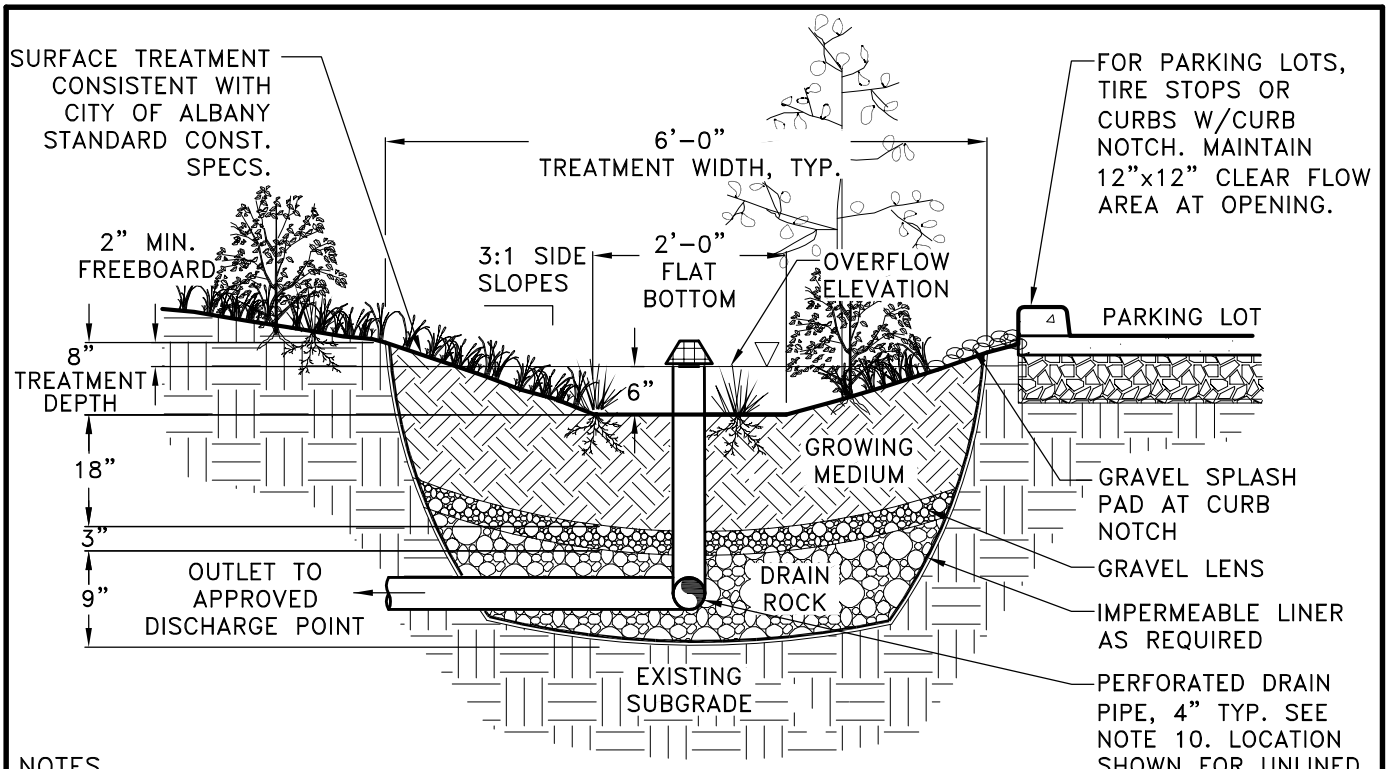

NOTES

1. PROVIDE PROTECTION FROM ALL VEHICLE TRAFFIC, EQUIPMENT STAGING, AND FOOT TRAFFIC IN PROPOSED FACILITY AREAS PRIOR TO, DURING, AND AFTER CONSTRUCTION.

2. THIS SWALE SECTION IS AN EXAMPLE. OTHER DIMENSIONS CAN BE PROPOSED FOR CONSIDERATION.

3. SETBACKS (FROM EDGE OF FACILITY):
   A. UNLINED SWALES MUST BE 10' FROM FOUNDATIONS AND 5' FROM PROPERTY LINES WHEN INVERT OF UNDER DRAIN IS HIGHER THAN GROUND SURFACE OF ADJACENT PROPERTY.
   B. MEET ANY CITY OF ALBANY DEVELOPMENT CODE REQUIREMENTS.

4. OVERFLOW:
   A. OVERFLOW REQUIRED.
   B. INLET ELEVATION MUST ALLOW FOR 2" OF FREEBOARD, MINIMUM.
   C. PROTECT FROM DEBRIS AND SEDIMENT WITH STRAINER OR GRATE.
   D. SIZE TO PASS LARGER STORM FLOWS, AS NECESSARY.

5. DRAIN ROCK: SHALL BE CONSISTENT WITH CITY OF ALBANY STANDARD CONSTRUCTION SPECIFICATIONS.

6. GRAVEL LENS: 3" SEPARATION BETWEEN DRAIN ROCK AND GROWING MEDIUM. SHALL BE CONSISTENT WITH CITY OF ALBANY STANDARD CONSTRUCTION SPECIFICATIONS.

7. GROWING MEDIUM: SHALL BE CONSISTENT WITH CITY OF ALBANY STANDARD CONSTRUCTION SPECIFICATIONS.

8. VEGETATION: DEVELOP PLANTING PLAN PER ENGINEERING STANDARDS.

9. IMPERMEABLE LINER AND LINER PENETRATIONS: IF REQUIRED, SHALL BE CONSISTENT WITH CITY OF ALBANY STANDARD CONSTRUCTION SPECIFICATIONS.

10. IN UNLINED FACILITIES, BOTTOM OF PERFORATED DRAIN PIPE SHALL BE SET AT 2 1/2" ABOVE EXISTING SUBGRADE. IN LINED FACILITIES, BOTTOM PERFORATED DRAIN PIPE SHALL BE SET AT BASE OF DRAIN ROCK LAYER.

11. GRAVEL SPLASH PAD: INSTALL 4" WASHED RIVER ROCK TO TRANSITION FROM CURB NOTCH TO GROWING MEDIUM.

11. CHECK DAMS: USE AS NEEDED TO MAINTAIN FLAT PLANTER SURFACE AND REQUIRED FREEBOARD ON SLOPED SITES. INDIVIDUAL DESIGNS WILL VARY. SEE ALBANY STANDARD CONSTRUCTION SPECIFICATIONS FOR PUBLIC FACILITY EXAMPLE.

12. PLUMBING SHALL CONFORM TO THE OREGON PLUMBING SPECIALTY CODE. OBTAIN PERMITS AS NEEDED FROM CITY OF ALBANY BUILDING DIVISION.

13. SEE ENGINEERING STANDARD TEXT FOR ADDITIONAL STORMWATER QUALITY DESIGN REQUIREMENTS.

CITY OF ALBANY, OREGON PUBLIC WORKS DEPARTMENT	
ONSITE SWALE DESIGN GUIDE	
NO SCALE	JANUARY 2015

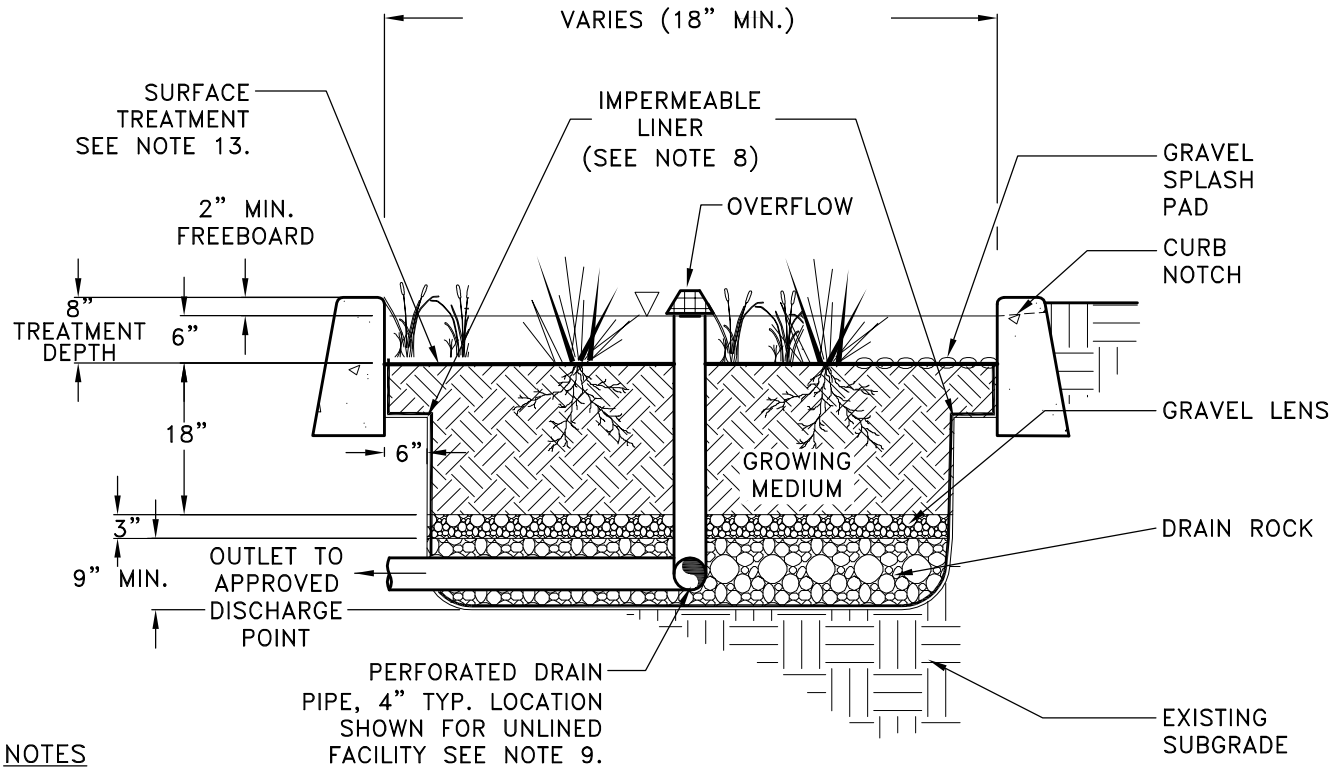

NOTES

1. PROVIDE PROTECTION FROM ALL VEHICLE TRAFFIC, EQUIPMENT STAGING, AND FOOT TRAFFIC IN PROPOSED FACILITY AREAS PRIOR TO, DURING, AND AFTER CONSTRUCTION.

2. SETBACKS (FROM EDGE OF FACILITY):
   A. UNLINED SWALES MUST BE 10' FROM FOUNDATIONS AND 5' FROM PROPERTY LINES WHEN INVERT OF THE UNDER DRAIN IS HIGHER THAN GROUND SURFACE OF ADJACENT PROPERTY.
   B. MEET ANY CITY OF ALBANY DEVELOPMENT CODE REQUIREMENTS.

3. OVERFLOW:
   A. OVERFLOW REQUIRED.
   B. INLET ELEVATION MUST ALLOW FOR 2" OF FREEBOARD, MINIMUM.
   C. PROTECT FROM DEBRIS AND SEDIMENT WITH STRAINER OR GRATE.
   D. SIZE TO PASS LARGER STORM FLOWS, AS NECESSARY.

4. DRAIN ROCK: SHALL BE CONSISTENT WITH CITY OF ALBANY STANDARD CONSTRUCTION SPECIFICATIONS.

5. GRAVEL LENS: 3" SEPARATION BETWEEN DRAIN ROCK AND GROWING MEDIUM. SHALL BE CONSISTENT WITH CITY OF ALBANY STANDARD CONSTRUCTION SPECIFICATIONS.

6. GROWING MEDIUM: SHALL BE CONSISTENT WITH CITY OF ALBANY STANDARD CONSTRUCTION SPECIFICATIONS.

7. VEGETATION: DEVELOP PLANTING PLAN PER ENGINEERING STANDARDS.

8. IMPERMEABLE LINER AND LINER PENETRATIONS: IF REQUIRED, SHALL BE CONSISTENT WITH CITY OF ALBANY STANDARD CONSTRUCTION SPECIFICATIONS.

9. IN UNLINED FACILITIES, BOTTOM OF PERFORATED DRAIN PIPE SHALL BE SET AT 2 1/2" ABOVE EXISTING SUBGRADE. IN LINED FACILITIES, BOTTOM PERFORATED DRAIN PIPE SHALL BE SET AT BASE OF DRAIN ROCK LAYER.

10. CHECK DAMS: USE AS NEEDED TO MAINTAIN FLAT PLANTER SURFACE ON SLOPED SITES. INDIVIDUAL DESIGNS WILL VARY. SEE ALBANY STANDARD CONSTRUCTION SPECIFICATIONS FOR PUBLIC FACILITY EXAMPLE.

11. PLUMBING SHALL CONFORM TO THE OREGON PLUMBING SPECIALTY CODE. OBTAIN PERMITS AS NEEDED FROM CITY OF ALBANY BUILDING DIVISION.

12. SEE ENGINEERING STANDARDS FOR ADDITIONAL DESIGN REQUIREMENTS.

13. SURFACE TREATMENT SHALL BE CONSISTENT WITH CITY OF ALBANY STANDARD CONSTRUCTION SPECIFICATIONS.

CITY OF ALBANY, OREGON PUBLIC WORKS DEPARTMENT	
ONSITE PLANTER DESIGN GUIDE	
NO SCALE	JANUARY 2015

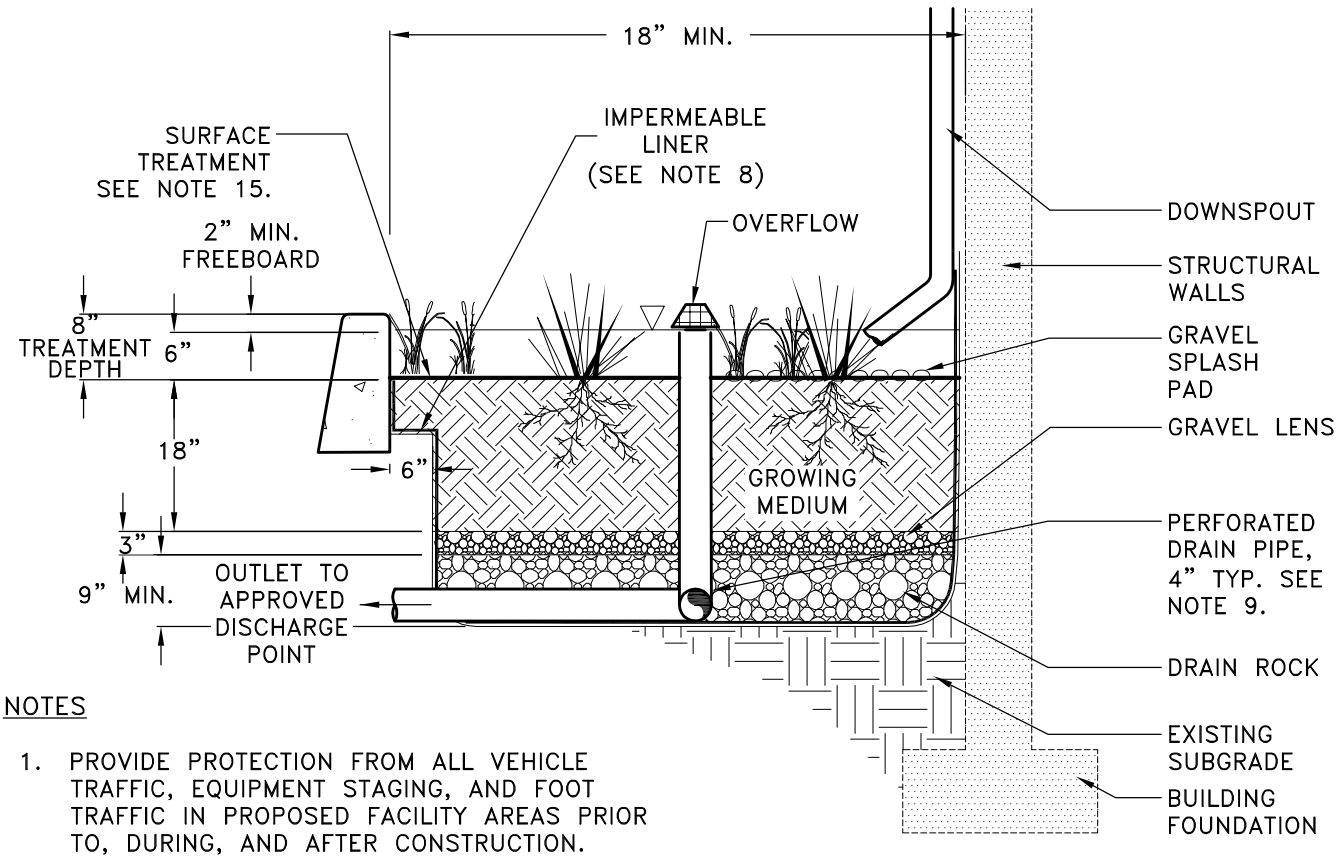

NOTES

1. PROVIDE PROTECTION FROM ALL VEHICLE TRAFFIC, EQUIPMENT STAGING, AND FOOT TRAFFIC IN PROPOSED FACILITY AREAS PRIOR TO, DURING, AND AFTER CONSTRUCTION.

2. SETBACKS (FROM EDGE OF FACILITY):
   A. MEET ANY CITY OF ALBANY DEVELOPMENT CODE REQUIREMENTS.

3. OVERFLOW:
   A. OVERFLOW REQUIRED.
   B. INLET ELEVATION MUST ALLOW FOR 2" OF FREEBOARD, MINIMUM.
   C. PROTECT FROM DEBRIS AND SEDIMENT WITH STRAINER OR GRATE.
   D. SIZE TO PASS LARGER STORM FLOWS, AS NECESSARY.

4. DRAIN ROCK: SHALL BE CONSISTENT WITH CITY OF ALBANY STANDARD CONSTRUCTION SPECIFICATIONS.

5. GRAVEL LENS: 3" SEPARATION BETWEEN DRAIN ROCK AND GROWING MEDIUM. SHALL BE CONSISTENT WITH CITY OF ALBANY STANDARD CONSTRUCTION SPECIFICATIONS.

6. GROWING MEDIUM: SHALL BE CONSISTENT WITH CITY OF ALBANY STANDARD CONSTRUCTION SPECIFICATIONS.

7. VEGETATION: DEVELOP PLANTING PLAN PER ENGINEERING STANDARDS.

8. IMPERMEABLE LINER REQUIRED FOR BUILDING PLANTER AND LINER PENETRATIONS SHALL BE CONSISTENT WITH CITY OF ALBANY STANDARD CONSTRUCTION SPECIFICATIONS.

9. BOTTOM OF PERFORATED DRAIN PIPE SHALL BE SET AT BASE OF DRAIN ROCK LAYER.

10. GRAVEL SPLASH PAD: INSTALL 4" WASHED RIVER ROCK TO TRANSITION FROM CURB NOTCH TO GROWING MEDIUM.

11. CHECK DAMS: USE AS NEEDED TO MAINTAIN FLAT PLANTER SURFACE ON SLOPED SITES. INDIVIDUAL DESIGNS WILL VARY. SEE ALBANY STANDARD CONSTRUCTION SPECIFICATIONS FOR PUBLIC FACILITY EXAMPLE.

12. PLUMBING SHALL CONFORM TO THE OREGON PLUMBING SPECIALTY CODE. OBTAIN PERMITS AS NEEDED FROM CITY OF ALBANY BUILDING DIVISION.

13. SEE BUILDING DIVISION STANDARDS FOR ADDITIONAL REQUIREMENTS FOR PLANTERS ADJACENT TO A BUILDING.

14. SEE ENGINEERING STANDARD TEXT FOR ADDITIONAL STORMWATER QUALITY DESIGN REQUIREMENTS.

15. SURFACE TREATMENTS SHALL BE CONSISTENT WITH CITY OF ALBANY STANDARD CONSTRUCTION SPECIFICATIONS.

CITY OF ALBANY, OREGON PUBLIC WORKS DEPARTMENT	
ONSITE PLANTER DESIGN GUIDE (BUILDING PLANTER)	
NO SCALE	JANUARY 2015

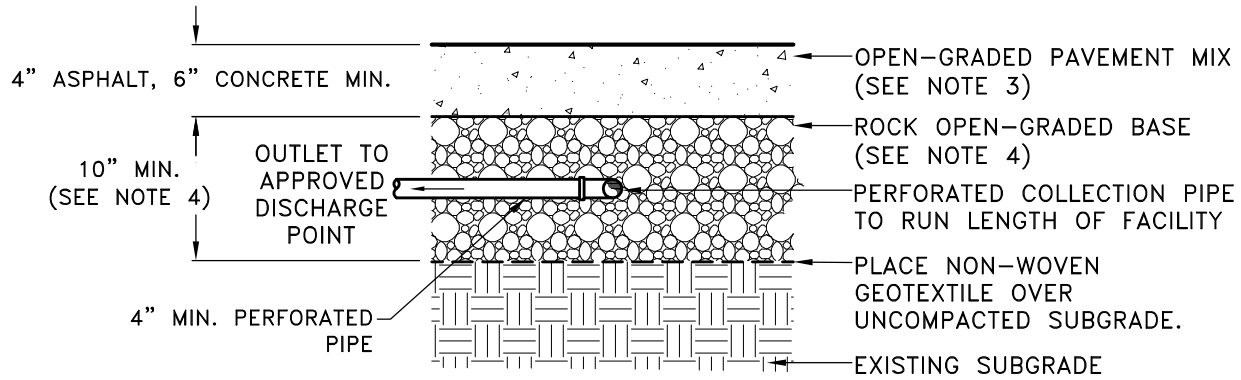

NOTES

1. PROVIDE PROTECTION FROM ALL VEHICLE TRAFFIC, EQUIPMENT STAGING IN PROPOSED FACILITY AREAS PRIOR TO AND DURING CONSTRUCTION.

2. PERVIOUS PAVEMENT SHALL ONLY BE CONSIDERED FOR IMPERVIOUS AREA REDUCTION CREDIT WHEN IT IS DESIGNED WITHOUT ANY IMPERMEABLE LINER.

3. OPEN-GRADED PAVEMENT MIX: SHALL BE CONSISTENT WITH CITY OF ALBANY ENGINEERING STANDARDS. MIX DESIGN REQUIRES APPROVAL OF THE CITY ENGINEER.

4. ROCK OPEN-GRADED BASE: SHALL BE CONSISTENT WITH CITY OF ALBANY ENGINEERING STANDARDS.

5. PLUMBING SHALL CONFORM TO THE OREGON PLUMBING SPECIALTY CODE. OBTAIN PERMITS AS NEEDED FROM CITY OF ALBANY BUILDING DIVISION.

6. SEE ENGINEERING STANDARDS FOR ADDITIONAL STORMWATER QUALITY DESIGN REQUIREMENTS.

CITY OF ALBANY, OREGON PUBLIC WORKS DEPARTMENT	
PERVIOUS PAVEMENT DESIGN GUIDE	
NO SCALE	JANUARY 2015